CINEMARK

The Best Seat In Town

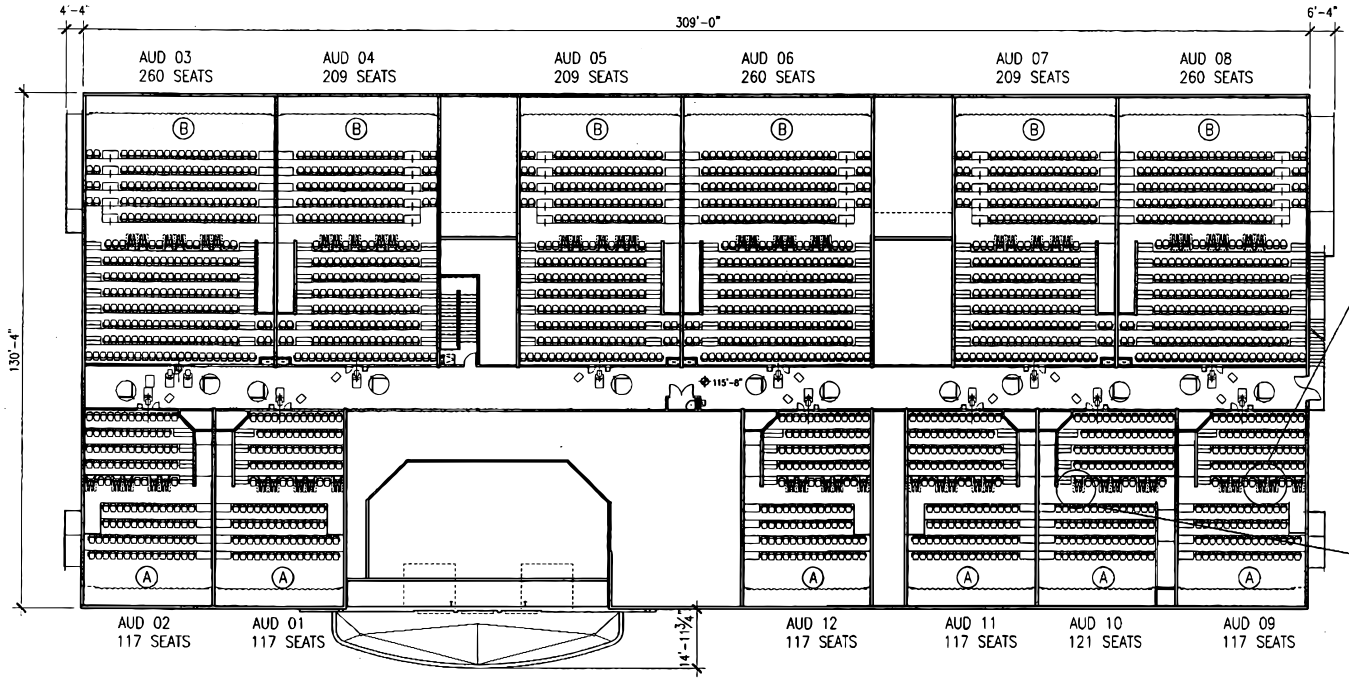

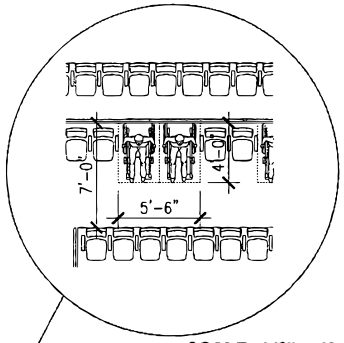

SCALE: 1/8" = 1'-0"

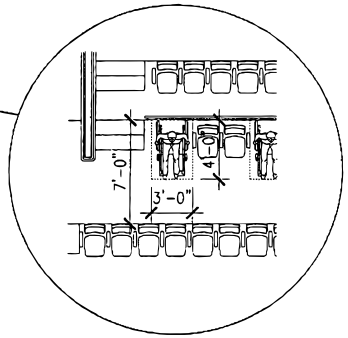

SCALE: 1/8" = 1'-0"

NOTE: 3'-0" WIDE SINGLE ACCESSIBLE SPACE IS LARGER THAN HAS BEEN IN PAST. THIS DIMENSION MEETS ADAAG REQUIREMENTS.

PROTOTYPE A12S - SEATING PLAN

SCALE: 1"=30'-0"

DATE: 10.28.2004