UNITED STATES DISTRICT COURT

NORTHERN DISTRICT OF CALIFORNIA

EUREKA DIVISION

UNITED STATES OF AMERICA, Plaintiff, v. HUMBOLDT COUNTY, Defendant.	JOINT MOTION FOR ENTRY OF CONSENT DECREE[1] Civil Action No. 16-5139

Plaintiff United States of America and Defendant Humboldt County (collectively "the Parties") have resolved all issues in this matter by the proposed Consent Order, attached as Exhibit A, memorialized by the signatures at pages 19 - 20. In light of this agreed-upon resolution of this action, the Parties respectfully request the Court's consideration and approval of the attached Consent Order and entry of the attached Proposed Order.

[1] This Joint Motion for Entry of the Consent Decree is submitted jointly by all the parties to this action. Pursuant to Civ. LR 3-4(a), a complete list of the parties is contained on the signature page of this document.

FOR HUMBOLDT COUNTY BOARD OF SUPERVISORS:

/s/Mary Blair Angus
MARY BLAIR ANGUS (CABN 210160)
Deputy County Counsel
Humboldt County
825 5th Street
Eureka, CA 95501
Telephone: (707) 445-7236
Bangus@co.humboldt.ca.us

Date: September 7, 2016

FOR THE UNITED STATES OF AMERICA:

VANITA GUPTA
Principal Deputy Assistant Attorney General
Civil Rights Division

EVE L. HILL
Deputy Assistant Attorney General
Civil Rights Division

BRIAN J. STRETCH
United States Attorney
Northern District of California

REBECCA B. BOND
Chief
KEVIN J. KIJEWSKI
Deputy Chief, Disability Rights Section
Civil Rights Division

/s/Dov Lutzker
DOV LUTZKER (CABN 185106)
Trial Attorney
Disability Rights Section
Civil Rights Division
U.S. Department of Justice
950 Pennsylvania Avenue, N.W. – NYA
Washington, DC 20530
Telephone: (202) 514-5746
Facsimile: (202) 514-7821
Dov.Lutzker@usdoj.gov

SARA WINSLOW
Chief
Civil Division
Assistant United States Attorney

/s/Melanie Proctor
MELANIE PROCTOR (CABN 228971)[2]
Assistant United States Attorney
United States Attorney's Office
Northern District of California
450 Golden Gate Avenue
San Francisco, CA 94102
Telephone: (415) 436-6730
Facsimile: (415) 436-6748
Melanie.Proctor@usdoj.gov

[2] I, Melanie L. Proctor, hereby attest that I obtained the concurrence of all signatories whose signature is represented by a conformed /s/ signature in the filing of this document.

UNITED STATES DISTRICT COURT

NORTHERN DISTRICT OF CALIFORNIA

SAN FRANCISCO DIVISION

UNITED STATES OF AMERICA, Plaintiff, v. HUMBOLDT COUNTY, Defendant.	)))))))))	[PROPOSED] CONSENT DECREE Civil Action No. 16-5139

I. BACKGROUND

A. INTRODUCTION

1. This matter is before the Court for entry of a consent decree agreed to by Plaintiff United States of America ("United States") and Defendant Humboldt County, California ("County"), collectively the "Parties."

2. The United States brought this civil action to enforce Title II of the Americans with Disabilities Act of 1990 ("ADA"), 42 U.S.C. §§ 12131–12134 and the U.S. Department of Justice's ("Department") regulation implementing Title II, 28 C.F.R. Part 35.

3. The United States alleges that Humboldt County has discriminated, and continues to discriminate, against individuals with disabilities by failing to make County facilities, programs, services, and activities accessible to and useable by individuals with disabilities in violation of the ADA.

4. The Department initiated a compliance review of Humboldt County under its Project Civic Access ("PCA") initiative, a wide-ranging effort to ensure that cities, counties, and other public entities throughout the country comply with the ADA by eliminating physical, communication, and other barriers that prevent people with disabilities from participating fully in community life. The Department's review of the County included a review of its programs and an accessibility survey of over 50 facilities. As the result of its review, the Department found numerous violations of the ADA, notified the County of the violations and negotiated a settlement agreement in which the County committed to bring its facilities, programs, services and activities into compliance with the ADA. The settlement agreement, which expired on July 23, 2011, included timelines for the County's compliance. The County failed to complete most of the actions required by the agreement and the County continues to have barriers to access that prevent individuals with disabilities from participating in County programs, services, and activities and that violate the ADA.

B. PARTIES

5. Plaintiff is the United States of America.

6. Defendant is Humboldt County, California. The County is a "public entity" within the meaning of the ADA, 42 U.S.C. § 12131(1)(A), and is subject to the ADA and its implementing regulation.

7. Defendant owns and operates facilities, programs, services, and activities within the meaning of the ADA.

C. JURISDICTION AND VENUE

8. The Court has jurisdiction of this action under 28 U.S.C. §§ 1331, 1345 and 42 U.S.C. § 12133. The Court may grant declaratory and other relief pursuant to 28 U.S.C. §§ 2201 and 2202, and 42 U.S.C. § 12133.

9. Venue is proper in the Eureka Division of this District pursuant to 28 U.S.C. § 1391 because the County is located in this District and all of the claims and events giving rise to this action occurred in this District.

II. AGREED RESOLUTION

10. The Parties agree it is in their best interests to resolve this matter by entry of this Consent Decree. The Parties agree and stipulate to the Court's entry of this Consent Decree resolving the Plaintiff's complaint against the County.

Now it is hereby ORDERED AND DECREED as follows:

A. GENERAL NONDISCRIMINATION REQUIREMENTS

11. Humboldt County will not discriminate against individuals with a disability, and will not, based on disability:

a) Deny the benefits of its programs, services, and activities. 28 C.F.R. § 35.130(b)(1).

b) Provide an unequal, different, or separate opportunity to participate in its programs, services, and activities. 28 C.F.R. § 35.130(b)(1), (3).

c) Limit the enjoyment of any right, privilege, advantage, or opportunity enjoyed by others. 28 C.F.R. § 35.130(b)(1)(vii).

d) Determine the site or location of a facility that has the effect of excluding individuals with disabilities from, denying them the benefits of, or otherwise subjecting them to discrimination or that have the purpose or effect of defeating or substantially impairing the accomplishment of the objectives of the program, service, or activity with respect to individuals with disabilities. 28 C.F.R. § 35.130(b)(4).

12. Humboldt County agrees that it will comply with the ADA and the Title II regulation by:

a) Administering its programs services, and activities in the most integrated setting appropriate to the needs of qualified individuals with disabilities. 28 C.F.R. § 35.130(d).

b) Operating each program, service, or activity so that, when viewed in its entirety, it is readily accessible to and usable by individuals with disabilities. 28 C.F.R. §§ 35.149-.150.

c) Ensuring that facilities for which construction or alteration was begun after January 26, 1992, are readily accessible to and usable by people with disabilities, in accordance with the Title II regulation and the applicable accessibility standards. 28 C.F.R. § 35.151.

d) Ensuring that communications with people with disabilities, including applicants, participants, and members of the public, are as effective as communications with others, including furnishing auxiliary aids and services when necessary. 28 C.F.R. § 35.160.

B. NOTIFICATION

13. Within thirty (30) days of the entry of this Consent Decree, the County will adopt and follow the attached *Notice under the Americans with Disabilities Act*, Attachment A ("Notice"); distribute the Notice to all its agency heads; publish the Notice in a local newspaper of general circulation serving the County on four (4) different days, including two (2) Sunday editions; post the Notice on its Internet Home Page (humboldtgov.org); and post the Notice in conspicuous locations in its public buildings. The County will refresh each posted Notice, and update the contact information contained on each Notice, as necessary, during the term of this Consent Decree. The County will provide the Notice to any person upon request.

14. Within three (3) months of the entry of this Consent Decree, and annually thereafter for the duration of the term of this Consent Decree, the County will implement, follow, and send to the United States its written procedures to inform all interested individuals of the existence and location of its accessible programs, services, and activities.

C. ADA COORDINATOR

15. Within one hundred eighty (180) days of the entry of this Consent Decree, the County will appoint or hire one or more ADA Coordinators, who must be pre-approved by the United States and trained in and knowledgeable about the ADA. The ADA Coordinator(s) will coordinate the County's

effort to comply with this Consent Decree and the ADA, including any investigation by the County of ADA-related complaints. The County will make available to all interested individuals the name(s), office address(es), telephone number(s), and email address(es) of the ADA Coordinator(s). The County will also post this information on its website, in an accessible and conspicuous location (*i.e.*, directly linked from the County's homepage) and accessible format (*i.e.*, HTML). If the County changes its ADA Coordinator(s), it will notify the United States in writing, and update the name and contact information everywhere it appears, within one (1) day of making such a change.

D. INDEPENDENT LICENSED ARCHITECT

16. Within one hundred eighty (180) days of the entry of this Consent Decree, the County will retain an Independent Licensed Architect ("ILA"), pre-approved initially and continually approved by the United States throughout the term of the Consent Decree, who is trained in and knowledgeable about the accessibility requirements of the ADA. The ILA must act independently to certify whether any alterations, additions, or modifications made by the County during the term of this Consent Decree comply with the applicable standard pursuant to 28 C.F.R. § 35.151(c) and the Appendix to 28 C.F.R. § 35.151(c). The County will bear all costs and expenses of retaining and using the ILA, including the costs and expenses of any consultants and staff used by the ILA. The County will compensate this ILA without regard to the outcome.

17. In issuing certifications pursuant to this Consent Decree, the ILA will impartially prepare reports identifying each violation and demonstrating with photographs each violation that has been remediated and will use the certification form at Attachment B. The ILA will be considered a neutral inspector for purposes of issuing certifications of compliance and will be reasonably available to the United States to discuss findings in its and the County's reports, photographs, and certifications. The United States may also, in its discretion, provide technical assistance to the ILA. Upon request by the United States, the County will provide prior notice to the United States of inspections by the ILA to allow representatives of the United States to be present.

18. The County will submit ILA certifications along with its reporting requirements as set forth in this Consent Decree.

E. GRIEVANCE PROCEDURE

19. Within three (3) months of the entry of this Consent Decree, the County will adopt the attached *ADA Grievance Procedure*, Attachment C, distribute it to all of its agencies, post it on its website, and post copies of it in conspicuous locations in each of its public buildings. It will refresh each posted copy, and update the contact information contained on it, as necessary, for the term of the Consent Decree. The County will provide copies to any person upon request.

F. GENERAL EFFECTIVE COMMUNICATION PROVISIONS

20. Within three (3) months of the entry of this Consent Decree, the County will identify sources of qualified sign language and oral interpreters, qualified readers, real-time transcription services, and vendors able to convert documents to Braille. Within this three (3) month timeframe, the County will implement and report to the United States its written procedures, with time frames, for providing and fulfilling requests for sign language or oral interpreters, qualified readers, real-time transcription services, and documents in alternate formats, including Braille, large print, audio recording, and accessible electronic format (*e.g.*, HTML).

21. Within three (3) months of the entry of this Consent Decree, the County will train all employees who communicate with the public to use the California Relay Service to make and receive calls, and report to the United States the details of the trainings including the identity of the employees trained. The County will train all new employees who will have contact with the public at least five (5) business days before they first have contact with the public.

G. 911 EMERGENCY COMMUNICATIONS

22. Within three (3) months of the entry of this Consent Decree, the County will ensure that each of its 911 consoles or call stations can receive and respond to TTY communications effectively with an analog TTY or computer equivalent. Within three (3) months of the entry of this Consent Decree, the County will adopt written procedures for answering 911 calls and train all call takers to use a TTY or computer equivalent to take 911 calls. The training and procedures will include recognizing a "silent" open line as a potential TTY call, responding by analog TTY or computer equivalent, and answering TTY calls as quickly as other calls received. The County will monitor incoming 911 TTY calls, answer them as quickly and accurately as other calls, and send the written procedures and details of the training and monitoring to the United States.

H. LAW ENFORCEMENT AND EFFECTIVE COMMUNICATION

23. Within three (3) months of the entry of this Consent Decree, the County will implement the *Humboldt County Sheriff's Office's Policy Statement on Effective Communication with People Who are Deaf or Hard of Hearing*, Attachment D, and distribute to all sheriff department officers the *Guide for Law Enforcement Officers When in Contact with People Who are Deaf or Hard of Hearing*, Attachment E.

24. Within three (3) months of the entry of this Consent Decree, the County will hire or contract with local qualified oral and sign language interpreters to be available to its sheriff's department twenty-four hours every day.

25. Within three (3) months of the entry of this Consent Decree, the County will equip each sheriff station or substation and each jail and detention facility with a sufficient number of working TTYs, videophones, hearing aid compatible telephones, and volume control telephones, but no fewer than one (1) of each, to enable people who are deaf, hard of hearing, or who have speech impairments to make telephone calls of the same frequency and with the same availability as those people who do not use TTYs or videophones. Where telephone calls are time-limited, the County will adopt policies permitting a longer period of time for individuals using a TTY, videophone, or relay service due to the slower nature of these communications as compared to voice communications. If any person who is deaf, hard of hearing, or who has a speech impairment prefers a different method of communication, such as a captioned telephone or computer, the County will make reasonable efforts to provide the communication device requested.

I. EMERGENCY MANAGEMENT PROCEDURES AND POLICIES

26. The County's Emergency Operations Plan ("EOP") must comply with the ADA. The County will use Chapter 7 of the Department of Justice's *ADA Best Practices Tool Kit for State and Local Government* ("ADA Tool Kit") to address ADA obligations of emergency management, including planning, preparedness, evacuation, shelters, medical and social services, lodging and housing programs, recovery, and rebuilding.

27. Within sixty (60) days of the entry of this Consent Decree, the County will incorporate the provisions of Chapter 7 of the *ADA Tool Kit* into its EOP and provide a copy (including supporting

documents) to the United States.

28. The County's EOP will include the following:

a) Procedures to solicit, receive, and use input from people with a variety of disabilities on its emergency management plan (preparation, notification, response, and clean-up).

b) Community evacuation plans to enable people who have mobility disabilities, are blind or have low vision, are deaf or hard of hearing, have cognitive disabilities, mental illness, or other disabilities to either safely self-evacuate or be evacuated by others.

c) If the County's emergency warning system uses sirens or other audible alerts, then procedures to effectively inform people who are deaf or hard of hearing of an impending disaster.

d) A requirement that emergency shelters have a back-up generator and a way to keep medications refrigerated (such as a refrigerator or a cooler with ice). Access to back-up power and refrigeration at such shelters will be made available to people whose disabilities require access to electricity and refrigeration, for example, for using life-sustaining medical devices, providing power to motorized wheelchairs, and preserving certain medications, such as insulin, that require refrigeration. The written procedures will include a plan for notifying people of the location of such shelters.

e) Procedures ensuring that people who use service animals are not separated from their service animals when sheltering during an emergency, even if pets are prohibited in shelters. The procedures will not segregate people who use service animals from others but may take into account the potential presence of people who, for safety or health reasons, should not be in contact with certain types of animals.

f) Plans for providing equivalent opportunities for accessible post-emergency temporary housing to people with disabilities. The County will ensure that information it makes available regarding temporary housing includes information on accessible housing (such as accessible hotel rooms within the community or in nearby communities) that could be used if people with disabilities cannot immediately return home after a disaster if, for instance, necessary accessible features such as ramps or electrical systems have been compromised.

J. PHYSICAL CHANGES TO EMERGENCY SHELTERS

29. Some County emergency shelters may be owned or operated by other public entities

subject to Title II or by public accommodations subject to Title III and therefore they must provide program access or remove barriers to accessibility under the ADA. This Consent Decree does not limit future enforcement action against the other owners or operators of these emergency shelters.

30. Within nine (9) months of the entry of this Consent Decree, the ILA will survey all emergency shelters in the County using the survey instrument entitled *ADA Checklist for Emergency Shelters*, Attachment F to identify barriers to access for individuals with disabilities.

31. For County emergency shelters with barriers to access for individuals with disabilities, the County will either (1) remove all barriers to access by people with disabilities and have the ILA confirm removal of the barriers to the United States, or (2) relocate the emergency shelter to another facility that can be used as an emergency shelter and that has no barriers to access by people with disabilities within fifteen (15) months of the entry of this Consent Decree.

32. For shelters that are not owned or operated by the County, the County will request in writing that each of the owners and operators of the shelter facilities remove the noted barriers to access for people with disabilities within fifteen (15) months of the entry of this Consent Decree. The County will simultaneously send a copy of the request to the United States.

33. Within eighteen (18) months of the entry of this Consent Decree, the ILA will survey each shelter to determine whether the barriers have been removed. If not all barriers have been removed at a shelter, the County will identify and designate within twenty-four (24) months of the entry of this Consent Decree an accessible replacement shelter for each inaccessible shelter, which will be confirmed by the ILA using the survey instrument entitled *ADA Checklist for Emergency Shelters*, Attachment F.

34. Within three (3) months of the entry of this Consent Decree and until all emergency shelters are accessible as confirmed by the ILA, the County will identify and widely publicize to the public and to people with disabilities the most accessible emergency shelters.

K. SIDEWALKS

35. Within six (6) months of the entry of this Consent Decree, the County will implement and report to the ILA and the United States its written process for requesting and receiving input from people with disabilities regarding the accessibility of its sidewalks, including requests to add curb cuts at particular locations.

36. Within nine (9) months of the entry of this Consent Decree, the County and its ILA will identify and report to the United States: (1) a plan to identify all existing street level pedestrian walkways, streets, roads, and highways under the jurisdiction of Humboldt County that have not been constructed or altered since January 26, 1992; and (2) a timetable to provide curb ramps or other sloped areas that comply with the applicable architectural standards at all existing intersections of streets, roads, and highways having curbs or other barriers from a street level pedestrian walkway. The plan and timetable must be approved by the United States and will specify completion of all required curb ramps or other sloped areas that comply with the applicable architectural standards and the ADA within three (3) years. The plan and timetable shall give priority to requests from people with disabilities, walkways serving entities covered by the ADA, including state and local government offices and facilities, transportation, places of public accommodation, and employers, followed by walkways serving other areas.

37. Within three (3) years of the entry of this Consent Decree, the County will provide curb ramps or other sloped areas complying with the applicable architectural standards as permitted by 28 C.F.R. § 35.151(c) and its Appendix, copied below, at all intersections of the streets, roads, and highways constructed or altered since January 26, 1992, that have curbs or other barriers from a street level pedestrian walkway, and at all places where a street level pedestrian walkway constructed or altered since January 26, 1992, intersects with a street, road, or highway.

Date of Construction or Alteration	**Applicable Standards**
Before September 15, 2010	1991 ADA Standards or Uniform Federal Accessibility Standards ("UFAS")
On or after September 15, 2010, and before March 15, 2012	1991 ADA Standards, UFAS, or 2010 ADA Standards
On or after March 15, 2012	2010 ADA Standards

38. Annually, the ILA will confirm to the United States that the County has provided curb ramps or other sloped areas where required that are in compliance with the applicable architectural standards in accordance with the approved plan and its timetable. If the County fails to comply with the approved plan and its timetable, the United States may file a motion to enforce this Consent Decree pursuant to paragraph 63.

39. Following entry of this Consent Decree, whenever a street, road, highway, or street level pedestrian walkway intersecting with a street, road or highway is constructed or altered, the County will provide curb ramps or other sloped areas complying with the 2010 ADA Standards at any intersection having curbs or other barriers to entry from a street level pedestrian walkway. Annually, the ILA will confirm to the United States that the County has provided curb ramps or other sloped areas where required that comply with the 2010 ADA Standards.

L. WEB-BASED SERVICES AND PROGRAMS

40. Within three (3) months of the entry of this Consent Decree, the County will:

a) Designate an employee as the Web Accessibility Coordinator for the County who will be responsible for coordinating the County's compliance with the requirements of this section, Section L, of this Consent Decree. The Web Accessibility Coordinator will have experience with the requirements of Title II of the ADA, the Web Content Accessibility Guidelines ("WCAG") version 2.0 (published by the World Wide Web Consortium ("W3C"), Web Accessibility Initiative ("WAI"), available at www.w3.org/TR/WCAG) and website accessibility generally; and

b) Retain an independent consultant ("Website Accessibility Consultant"), approved by the United States, who is knowledgeable about accessible website development, Title II of the ADA, and WCAG 2.0 to evaluate the County's website and any proposed online services for compliance with the ADA and, at minimum, WCAG 2.0 Level A and Level AA Success Criteria and other Conformance Requirements ("WCAG 2.0 AA"), and who will be responsible for the annual website accessibility evaluation described in detail in paragraph 41(d). The County will bear all costs and expenses of retaining and utilizing this Website Accessibility Consultant, including the costs and expenses of any staff needed by the Website Accessibility Consultant. The County will compensate this Website Accessibility Consultant without regard to the outcome.

41. Within two (2) months of the entry of this Consent Decree, and annually thereafter, the County will:

a) Adopt, implement, and post online a policy that its web pages will conform with WCAG 2.0 AA;

b) Distribute the policy to all employees and contractors who design, develop,

maintain, or otherwise have responsibility for its websites, or provide website content, technical support, or customer service;

c) Provide training to website content personnel on how to conform all web content and services with, at minimum, WCAG 2.0 AA, Title II of the ADA, and the terms of this Consent Decree;

d) Assess all existing web content and online services covered by this Consent Decree for conformance with WCAG 2.0 AA and perform automated accessibility tests of the County's website and all of its online services, using an automated tool approved by the United States, to identify any accessibility barriers;

e) Provide a notice, prominently and directly linked from its homepage, instructing visitors to its websites on how to request accessible information. The link will provide several methods to request accessible information, including an accessible form to submit feedback, an email address, and a toll-free phone number to contact personnel knowledgeable about the accessibility of the website; and

f) Provide a notice, prominently and directly linked from its homepage, soliciting feedback from visitors to its websites on how to improve website accessibility. The link will provide several methods to provide feedback, including an accessible form to submit feedback, an email address, and a toll-free phone number to contact personnel knowledgeable about the accessibility of the website.

42. Within twelve (12) months of the entry of this Consent Decree, the County will:

a) Ensure that its websites and all online services, including those websites or online services provided by third parties upon which the County relies to allow members of the public to participate in or benefit from the County's programs, services, or activities, comply with WCAG 2.0 AA, with the exception of the following categories of content:

(1) Archived web content, *i.e.*, content maintained exclusively for reference, research, or recordkeeping, which is not altered or updated after the date of archiving, and which is organized and stored in a dedicated area or areas clearly identified as being archived;

(2) Conventional electronic documents (*i.e.*, portable document file (PDF), word processor, presentation, spreadsheet, and database file formats) available on the County's websites

as of the entry of this Consent Decree, unless such documents are to be used by members of the public to apply for, gain access to, or participate in the County's programs, services, or activities; and

(3) Conventional electronic documents (*i.e.*, PDF, word processor, presentation, spreadsheet, and database file formats) or any other submissions by a third party in connection with an administrative, judicial, or legal proceeding that are available on the County's websites; and

b) Assess all proposed online services before they are made available to the public for conformance with WCAG 2.0 AA and perform automated accessibility tests, using an automated tool approved by the United States, to identify any accessibility barriers.

M. NEW CONSTRUCTION, ALTERATIONS, AND PHYSICAL CHANGES TO FACILITIES

43. All construction and alterations to County buildings and facilities by the County or on its behalf will comply with the requirements of 28 C.F.R. § 35.151, including applicable architectural standards. All architectural changes by the County or on its behalf made on or after March 15, 2012, must comply with the 2010 ADA Standards. The term "2010 ADA Standards" refers to the 2010 ADA Standards for Accessible Design (28 C.F.R. § 35.104 (Title II) (defining the "2010 ADA Standards" as the requirements set forth in appendices B and D to 36 C.F.R. part 1191 and the requirements contained in 28 C.F.R. § 35.151.)). All citations are to the 2010 ADA Standards unless otherwise noted.

44. The parts of a County facility that do not comply with the 1991 ADA Standards (or the 2010 ADA Standards, as applicable), as listed in Attachments G, H, I, and J, prevent people with disabilities from fully and equally enjoying the County's programs, services, or activities and constitute discrimination on the basis of disability within the meaning of 42 U.S.C. § 12132 and 28 C.F.R. §§ 35.149-35.151.

45. The County will remediate the violations listed in Attachments G, H, I, and J, by taking the actions outlined in those attachments within the specified timeframes. All architectural changes by the County or on its behalf made on or after March 15, 2012, must comply with the 2010 ADA Standards. The County will complete all actions identified in Attachments G, H, I, and J no later than thirty-three (33) months from the date of entry of this Consent Decree. Specific deadlines for each

facility are outlined in Attachments G, H, I, and J.

46. If the County has already undertaken an alteration, addition, or other modification to any element identified in Attachments G, H, I, or J or otherwise after January 26, 1992, and prior to the entry of this Consent Decree, the County will submit to the ILA and the United States within nine (9) months a written report pursuant to paragraph 61 below summarizing the actions taken, providing ILA certifications and providing evidence establishing each individual element's compliance with the applicable architectural standard as permitted by 28 C.F.R. § 35.151(c) and its Appendix, copied in the table below:

Date of Construction or Alteration	**Applicable Standards**
Before September 15, 2010	1991 ADA Standards or UFAS
On or after September 15, 2010, and before March 15, 2012	1991 ADA Standards, UFAS, or 2010 ADA Standards
On or after March 15, 2012	2010 ADA Standards

47. Within nine (9) months of the entry of this Consent Decree, the County will have the ILA survey all facilities that are the subject of this Consent Decree for the purpose of identifying those that have multiple entrances not all of which are accessible. Also within nine (9) months of the entry of this Consent Decree, the County will install directional signage at all inaccessible entrances to each of its facilities and will place the international symbol for accessibility at each accessible entrance to a facility, in accordance with 28 C.F.R. § 35.163(b).

48. Newly Constructed Facilities: The County will take the actions listed in Attachment G to make County facilities for which construction was commenced after January 26, 1992, readily accessible to and usable by people with disabilities.

49. Altered Facilities: The County will take the actions listed in Attachment H to make the altered parts of the County facilities for which alterations commenced after January 26, 1992, readily accessible to and usable by people with disabilities.

50. Program Access in Existing Facilities: The County will take the actions listed in Attachment I to make each of the County's programs, services, and activities operating at a facility that is the subject of this Consent Decree, when viewed in its entirety, readily accessible to and usable by

people with disabilities.

51. County Facilities and Programs that Are Not Listed in This Consent Decree: The County and the ILA will ensure compliance with the requirements of Title II for all of the County facilities and programs that are not listed in this Consent Decree and its attachments. The ILA will survey all the County's facilities for compliance with Title II of the ADA that the United States did not list in this Consent Decree. Within nine (9) months of the entry of this Consent Decree, the County and ILA will submit to the United States a detailed report from the ILA listing the access issues identified during the ILA's review together with the corrective actions and completion dates proposed to resolve such issues. The proposed completion dates may be no later than twelve (12) months prior to the termination of this Consent Decree. The survey conducted by the ILA, the access issues identified, and the corrective actions and completion dates proposed will be consistent with the requirements of Title II; the review of the County facilities and programs conducted by the United States for purposes of this Consent Decree; and the access issues, corrective actions, and completion dates reflected in Attachments G, H, I, and J.

N. PROGRAM MODIFICATIONS

52. Access to County Programs Housed in Non-County Owned Facilities: To ensure that the County's programs, services, and activities that are the subject of this Consent Decree and that are operated by the County at facilities owned or controlled by other entities, when viewed in their entirety, are readily accessible to and usable by people with mobility impairments, the County will take the actions listed in Attachment J.

O. MONETARY RELIEF

53. Within ten (10) business days after the entry of this Consent Decree, the County will deposit Two Hundred Seventy-Five Thousand Dollars ($275,000) in an interest-bearing account for the purpose of compensating aggrieved persons who have been harmed by the County's noncompliance with the ADA. Within fifteen (15) business days after the entry of this Consent Decree, the County will submit proof to the United States that the account has been established and the funds deposited. The County will bear all costs of establishing the account, maintaining it, and issuing checks from it. Copies of account statements will be promptly provided to the United States, upon request.

54. Within thirty (30) days after the entry of this Consent Decree, the County will produce to

the United States any complaints about access to any County facilities, programs, services, or activities that it has received from or on behalf of an individual alleged to have a disability.

55. Within ninety (90) days of the effective date of this Consent Decree, the United States will determine which persons have already been harmed by ADA violations in the County and will determine in its sole discretion an appropriate amount of damages to be awarded each such person, provided that: No person will be paid pursuant to this Section of the Consent Decree until the United States has received an executed "Waiver and Release of Claims" form from that person that is substantially similar to the form attached as Attachment K. The total amount to be paid by the County pursuant to this Section of the Consent Decree will not exceed Two Hundred Seventy-Five Thousand Dollars ($275,000) plus any interest accrued in the account established under paragraph 53.

56. The United States will notify the County in writing in one or more notifications of its determinations of the amount to be paid to each aggrieved person. Within thirty (30) days after receiving each such written notification, the County will deliver to the United States checks to the aggrieved persons made payable as directed by the United States. The United States will provide a copy of the executed "Waiver and Release of Claims" forms before sending checks to the aggrieved persons.

57. The United States may also seek compensation in the future for individuals aggrieved by non-compliance with the Consent Decree. The Court shall have jurisdiction over any such claims.

P. MAINTENANCE OF ACCESSIBLE FEATURES AND TRAINING

58. Throughout the term of this Consent Decree, consistent with 28 C.F.R. § 35.133(a), the County will maintain the accessibility of its programs, services, activities, facilities, and equipment, including routinely testing accessibility equipment and routinely auditing the accessibility of its programs and facilities. This provision, however, does not prohibit isolated or temporary interruptions in service or access due to maintenance or repairs. 28 C.F.R. § 35.133(b).

59. Within nine (9) months of the entry of this Consent Decree, the County will submit for pre-approval by the United States a proposed training program, lasting at least four hours, on the requirements of the ADA and appropriate ways of serving people with disabilities. The submission will include a description of the training, the agenda, any handouts, and the name, title, and address of the trainer.

60. Within one (1) year of the entry of this Consent Decree and annually thereafter, after approval of the training program by the United States, all County employees who have direct contact with members of the public will be trained for at least four hours on the requirements of the ADA and appropriate ways of serving people with disabilities. Within thirty (30) days after each training the County will submit to the United States the list of employees trained.

61. Beginning six (6) months after the entry of this Consent Decree and every six (6) months thereafter throughout the term of this Consent Decree, the County will submit written reports to the United States summarizing the actions taken by the County to comply with this Consent Decree, including modified facilities, programs, services, and activities. The report will include the ILA certifications received pursuant to paragraphs 16 through 18 of this Consent Decree, photographs showing measurements, architectural plans, notices published in the newspaper, copies of adopted policies and a copy of any other documents or information required by this Consent Decree. The reports will include input from the County's ADA Coordinators.

Q. COMPLIANCE

62. It is a violation of this Consent Decree for the County to fail to comply in a timely manner with any of the requirements of this Consent Decree.

63. The United States may review compliance with this Consent Decree at any time and may file a motion to enforce this Consent Decree if it believes that the Consent Decree, or any requirement thereof, has been violated. The United States may conduct an on-site review of any County facility, review any County records related to actions required by the Consent Decree, and interview any County employees or contractors for purposes of reviewing compliance with this Consent Decree and ADA requirements, including the requirements of the ADA Standards. If the United States identifies any noncompliance with the Consent Decree or the ADA Standards, the County must correct its noncompliance within thirty (30) days of receipt of notice of noncompliance from the United States or the United States may seek the Court's assistance to enforce this Consent Decree.

64. Any time limits for performance imposed by this Consent Decree may be extended by the mutual written agreement of the Parties, except for the term of this Consent Decree in paragraph 70.

65. Failure by the United States to enforce this Consent Decree or any of its provisions or

deadlines will not be construed as a waiver of the right of the United States to enforce any deadlines and provisions of this Consent Decree.

66. All material sent to the United States pursuant to this Consent Decree will be sent to the following address by common carrier, delivery prepaid: U.S. Department of Justice, Civil Rights Division, Disability Rights Section, Attn: Dov Lutzker, Trial Attorney, 1425 New York Avenue, NW, Washington, DC 20005, or by email at dov.lutzker@usdoj.gov. The cover letter will include a subject line referencing Humboldt County and DJ# 204-11-275.

67. This Consent Decree (including its Attachments) is the entire agreed order between the parties on the matters raised herein, and no other statement, promise, or agreement, either written or oral, made by either party will be enforceable. This Consent Decree does not relieve the County of its continuing obligation to comply with all aspects of the ADA.

68. The County will provide a copy of this Consent Decree and any information contained in it, including Attachments A through K, to any person, upon request.

69. This Consent Decree is binding on Humboldt County, and its agents, officers, employees, contractors, and successors in interest.

70. This Consent Decree will remain in effect for a minimum of forty-two (42) months. The Court shall retain continuing and exclusive jurisdiction for the duration of the Decree to enforce the terms of the Decree. The United States and/or the County may apply to the Court for such further orders as may be necessary for, or consistent with, the enforcement of this Decree, including an extension of the Consent Decree if the County fails to comply with the provisions herein.

IT IS SO ORDERED this ___day of _____, 2016.

_____

UNITED STATES DISTRICT COURT JUDGE

By their signatures below, the Parties respectfully consent to the entry of this Consent Decree.

FOR HUMBOLDT COUNTY BOARD OF SUPERVISORS:

MARK LOVELACE
Chair
Humboldt County Board of Supervisors

Date 8/ 9/ 16

FOR THE UNITED STATES OF AMERICA:

VANITA GUPTA
Principal Deputy Assistant Attorney General
Civil Rights Division

EVE L. HILL
Deputy Assistant Attorney General
Civil Rights Division

BRIAN J. STRETCH
United States Attorney
Northern District of California

REBECCA B. BOND
Chief
KEVIN J. KIJEWSKI
Deputy Chief
Disability Rights Section
Civil Rights Division

DOV LUTZKER, Trial Attorney
California Bar 185106
Disability Rights Section
Civil Rights Division
U.S. Department of Justice
950 Pennsylvania Avenue, N.W. – NYA
Washington, DC 20530
Telephone: (202) 514-5746
Facsimile: (202) 514-7821
Dov.Lutzker@usdoj.gov

SARA WINSLOW
Chief
Civil Division
Assistant United States Attorney

Melanie Proctor

MELANIE PROCTOR
Assistant United States Attorney
United States Attorney's Office
Northern District of California
450 Golden Gate Avenue
San Francisco, CA 94102
Telephone: (415) 436-6730
Facsimile: (415) 436-6748
Melanie.Proctor@usdoj.gov

Date September 7, 2016

NOTICE UNDER THE AMERICANS WITH DISABILITIES ACT

In accordance with the requirements of Title II of the Americans with Disabilities Act of 1990 ("ADA"), **Humboldt County, California** will not discriminate against qualified individuals with disabilities on the basis of disability in its services, programs, or activities.

Employment: The **County** does not discriminate on the basis of disability in its hiring or employment practices and complies with all regulations promulgated by the U.S. Equal Employment Opportunity Commission under Title I of the Americans with Disabilities Act (ADA).

Effective Communication: The **County** will generally, upon request, provide appropriate aids and services leading to effective communication for qualified persons with disabilities so they can participate equally in **County** programs, services, and activities, including qualified sign language interpreters, documents in Braille, and other ways of making information and communications accessible to people who have speech, hearing, or vision impairments.

Modifications to Policies and Procedures: The **County** will make all reasonable modifications to policies and programs to ensure that people with disabilities have an equal opportunity to enjoy all **County** programs, services, and activities. For example, individuals with service animals are welcomed in **County** offices, even where pets are generally prohibited.

Anyone who requires an auxiliary aid or service for effective communication, or a modification of policies or procedures to participate in a **County** program, service, or activity, should contact the office of **[name and contact info for ADA Coordinator]** as soon as possible but no later than 48 hours before the scheduled event.

The ADA does not require the **County** to take any action that would fundamentally alter the nature of its programs or services, or impose an undue financial or administrative burden.

Complaints that a **County** program, service, or activity is not accessible to persons with disabilities should be directed to **[name and contact info for ADA Coordinator]**.

The **County** will not place a surcharge on a particular individual with a disability or any group of individuals with disabilities to cover the cost of providing auxiliary aids/services or reasonable modifications of policy, such as retrieving items from locations that are open to the public but are not accessible to persons who use wheelchairs.

ATTACHMENT B

Certification of ADA Compliance

I, [insert name], in my capacity as an Independent Licensed Architect, retained by Humboldt County, California and approved by the United States, pursuant to the Consent Decree executed on [insert date],

Hereby CERTIFY to the best of my knowledge, information, and belief that the following element identified below is in compliance with the physical accessibility requirements of the Agreement and the Americans with Disabilities Act as of the date shown below.

Element Identified in Attachments X, X, and X to the Consent Decree:

Description of Element:

Location of Element:

_____ _____

Date Signature of Independent Licensed Architect

HUMBOLDT COUNTY, CA

Grievance Procedure under
The Americans with Disabilities Act

This Grievance Procedure is established to meet the requirements of the Americans with Disabilities Act of 1990. It may be used by anyone who wishes to file a complaint alleging discrimination on the basis of disability in the provision of services, activities, programs, or benefits by the ***County***. The ***County's*** Personnel Policy governs employment-related complaints of disability discrimination.

The complaint should be in writing and contain information about the alleged discrimination such as name, address, phone number of complainant and location, date, and description of the problem. Alternative means of filing complaints, such as personal interviews or a tape recording of the complaint, will be made available for persons with disabilities upon request.

The complaint should be submitted by the grievant and/or his/her designee as soon as possible but no later than 60 calendar days after the alleged violation to:

[Name and address of ADA Coordinator]

Within 15 calendar days after receipt of the complaint, ***[name of ADA Coordinator]*** or ***[his/her]*** designee will meet with the complainant to discuss the complaint and the possible resolutions. Within 15 calendar days of the meeting, ***[name of ADA Coordinator]*** or ***[his/her]*** designee will respond in writing, and where appropriate, in format accessible to the complainant, such as large print, Braille, or audio recording. The response will explain the position of the ***County*** and offer options for substantive resolution of the complaint.

If the response by ***[name of ADA Coordinator]*** or ***[his/her]*** designee does not satisfactorily resolve the issue, the complainant and/or his/her designee may appeal the decision within 15 calendar days after receipt of the response to the ***County Commissioner/ other appropriate high-level official*** or ***[his/her]*** designee.

Within 15 calendar days after receipt of the appeal, the ***County Commissioner/ other appropriate high-level official*** or ***[his/her]*** designee will meet with the complainant to discuss the complaint and possible resolutions. Within 15 calendar days after the meeting, the ***County Commissioner/ other appropriate high-level official*** or ***[his/her]*** designee will respond in writing, and, where appropriate, in a format accessible to the complainant, with a final resolution of the complaint.

All written complaints received by ***[name of ADA Coordinator]*** or ***[his/her]*** designee, appeals to the ***County Commissioner/ other appropriate high-level official*** or ***[his/her]*** designee, and responses from these two offices will be retained by the ***County*** for at least three years.

Humboldt County Sheriff's Office

POLICY STATEMENT REGARDING

EFFECTIVE COMMUNICATION WITH

PEOPLE WHO ARE DEAF OR HARD OF HEARING

OVERVIEW

It is the policy of this law enforcement agency (Agency) to ensure that a consistently high level of service is provided to all community members, including those who are deaf or hard of hearing. This Agency has specific legal obligations under the Americans with Disabilities Act and the Rehabilitation Act. To carry out these policies and legal obligations, the Agency instructs its officers and employees as follows:

- People who identify themselves as deaf or hard of hearing are entitled to a level of service equivalent to that provided others.

- The Agency will make every effort to ensure that its officers and employees communicate effectively with people who have identified themselves as deaf or hard of hearing.

- Effective communication with a person who is deaf or hard of hearing involved in an incident -- whether as a victim, witness, suspect, arrestee, or other persons connected to the situation -- is essential in ascertaining what actually occurred, the urgency of the matter, and the specifics of the situation.

- Various types of communication aids – known as "auxiliary aids and services" – are used to communicate with people who are deaf or hard of hearing. These include use of gestures or visual aids to supplement oral communication; an exchange of written notes; use of a computer; use of assistive listening devices (to amplify sound for persons who are hard of hearing); or use of qualified oral or sign language interpreters.

- The type of aid that will be required for effective communication will depend on the individual's usual method of communication, and the nature, importance, and duration of the communication at issue.

- In many circumstances, oral communication supplemented by gestures and visual aids, an exchange of written notes, use of a computer, or use of an assistive listening device may be effective. In other circumstances, qualified sign language or oral interpreters are needed to communicate effectively with persons who are

deaf or hard of hearing. The more lengthy, complex, and important the communication, the more likely it is that a qualified interpreter will be required for effective communication with a person whose primary means of communication is sign language or speech reading. For example:

– If there has been an incident and the officer is conducting witness interviews, a qualified sign language interpreter may be required to communicate effectively with someone whose primary means of communication is sign language.

– If a person is asking an officer for directions to a location, gestures and an exchange of written notes will likely be sufficient to communicate effectively and a sign language interpreter is often not required.

- To serve each individual effectively, primary consideration should be given to the communication aid or service that works best for that person. Officers must ask persons who are deaf or hard of hearing what type of auxiliary aid or service they need. Officers must defer to those expressed choices, unless there is another equally effective way of communicating, given the circumstances, length, complexity, and importance of the communication, as well as the communication skills of the person who is deaf or hard of hearing.

- The Agency is not required to provide a particular auxiliary aid or service if doing so would fundamentally alter the nature of the law enforcement activity in question, or if it would cause an undue administrative or financial burden. Only the Agency head or his or her designee may make this determination.

- The input of people who are deaf or hard of hearing who are involved in incidents is just as important to the law enforcement process as the input of others. Officers must not draw conclusions about incidents unless they fully understand -- and are understood by -- all those involved, including persons who are deaf or hard of hearing.

- Auxiliary aids or services are to be provided free of charge.

ON-CALL INTERPRETER SERVICES

- The Agency will maintain a list of sign language and oral interpreting services that are available (on-call 24 hours per day) to provide qualified interpreters as needed. Each of these services will be chosen after having been screened for the quality and skill of its interpreters, its reliability, and other factors. The Agency will update this list annually.

- A qualified sign language or oral interpreter is one who is able to interpret effectively, accurately, and impartially, both receptively and expressively, using any necessary specialized vocabulary. Accordingly, an interpreter must be able to sign to the deaf individual (or interpret orally to the person who does not use sign language) what is being said by the hearing person and to voice to the hearing person what is being signed or said by the deaf individual. The interpreter must be able to interpret in the language the deaf person uses (*e.g.*, American Sign Language or Signed English) and must be familiar with law enforcement terms and phrases. Because a qualified interpreter must be able to interpret impartially, a family member, child, or friend of the individual who is deaf may not be qualified to render the necessary interpretation because of factors such as professional, emotional, or personal involvement, or considerations of confidentiality. Additionally, although a "qualified" interpreter may be certified, a certified interpreter is not necessarily "qualified," if he or she is not a good communications match for the deaf person (*e.g.*, where the deaf person uses Signed English and the interpreter uses American Sign Language) or the situation (*e.g.*, where the interpreter is unfamiliar with law enforcement vocabulary). Certification is not required in order for an interpreter to be "qualified."

TTY AND RELAY SERVICES

- In situations when a nondisabled person would have access to a telephone, officers must provide persons who are deaf or hard of hearing the opportunity to place calls using a text telephone (TTY, also known as a telecommunications device for deaf people, or TDD). Officers must also accept telephone calls placed by persons who are deaf or hard of hearing through the Telecommunications Relay Service.

TECHNIQUES FOR OFFICERS TO COMMUNICATE EFFECTIVELY

- Officers must review and have a working knowledge of *Guide for Law Enforcement Officers When In Contact With People Who Are Deaf or Hard of Hearing*. This document reviews how officers should communicate effectively in the types of situations officers will encounter. These situations include:

  - Issuing a noncriminal or motor vehicle citation.
  - Communicating with a person who initiates contact with an officer.
  - Interviewing a victim or critical witness to an incident.
  - Questioning a person who is a suspect in a crime.
  - Making an arrest or taking a person into custody.
  - Issuing *Miranda Warnings* to a person under arrest or in custody.
  - Interrogating a person under arrest or in custody.

TYPES OF AUXILIARY AIDS AND SERVICES

- Officers must utilize the following auxiliary aids as appropriate, when available, to communicate effectively:

  – Use of gestures
  – Use of visual aids
  – Exchange of written notes
  – Use of computers
  – Use of assistive listening devices
  – Use of teletypewriters (TTYs)
  – Use of qualified oral or sign language interpreters
  – Use of video remote interpreting (VRI) services

GUIDE FOR LAW ENFORCEMENT OFFICERS

When In Contact With People Who Are Deaf or Hard of Hearing

As a law enforcement officer, you can expect to come into contact with people who are deaf or hard of hearing.

Title II of the Americans with Disabilities Act (ADA) of 1990 prohibits State and local governments from discriminating against an individual with a disability. Municipal and State police and county sheriff departments are bound by this Federal law. Your office has adopted a more detailed policy regarding law enforcement officers' communication with people who are deaf of hard of hearing. You should become familiar with this policy.

What does title II require of you when interacting with persons who are deaf or hard of hearing? Among other things, your communication with such an individual must be as effective as your communication with hearing people.

How do you communicate? Provide aids or services as necessary to ensure that the deaf or hard of hearing individual understands what you are saying and that you understand him or her. These can include:

- use of qualified sign language or oral interpreters,
- for people who are hard of hearing, speaking loudly and clearly, and use of assistive listening devices (to amplify sound),
- use of gestures or visual aids to supplement oral communication,
- an exchange of written notes, or
- use of a computer,
- use of video remote interpreting (VRI)

What method of communication should you use? The law requires you to give primary consideration to the individual's preference. Ask how the person wishes to communicate.

For example, some people who are deaf do not use sign language and may need to use a different aid or rely on lipreading. In one-on-one communication with an individual who lip reads, an officer should face the individual directly, and should ensure that the communication takes place in a well-lighted area.

Honor the individual's choice unless it would significantly interfere with your law enforcement responsibilities or you are confident that other means of communicating, that may be easier to provide, are just as effective. Remember that deaf or hard of hearing persons must be able to understand you as well as those who do not have hearing impairments.

DO NOT ask a family member or friend to interpret for a deaf individual unless it is urgent to communicate immediately and that is the only option. If the deaf person requests that arrangement and the other person agrees, however, you can proceed.

How do you know when you are communicating clearly to an individual who is deaf or hard of hearing? Ask the person to summarize what you are saying.

If the person uses sign language, what kinds of communication require an interpreter? Consider the length, importance, and complexity of the communication, as

well as the context.

– In a simple encounter, such as checking a driver's license or giving directions, a notepad and pencil or perhaps gestures will normally be sufficient.

– During interrogations and arrests, a sign language interpreter will often be necessary.

– If the legality of a conversation will be questioned in court, such as situations where *Miranda* warnings are issued, a sign language interpreter may be necessary. You should be careful about misunderstandings in the absence of a qualified interpreter. A nod of the head may be an attempt to appear cooperative in the midst of misunderstanding, rather than consent or a confession of wrongdoing.

– In general, if an individual who does not have a hearing disability would be subject to police action without interrogation, then an interpreter will not be required, unless one is necessary to explain the action being taken.

Example: An officer clocks a car on the highway driving 15 miles above the speed limit. The driver, who is deaf, is pulled over and issued a noncriminal citation. The individual is able to understand the reasons for the citation, because the officer exchanges notes and points to information on the citation. A sign language interpreter is not needed.

Example: An officer responds to an aggravated battery call and upon arriving at the scene observes a bleeding victim and an individual holding a weapon. Eyewitnesses observed the individual strike the victim. The individual with the weapon is deaf. Because the officer has probable cause to make a felony arrest without an interrogation, an interpreter is not necessary to carry out the arrest.

Example: An officer responds to the scene of a domestic disturbance. The husband says the wife has been beating their children and he has been trying to restrain her. The wife, who is deaf, requests an interpreter. The officer begins by exchanging notes but the woman's responses indicate a lack of comprehension. An interpreter should be called. If the woman's behavior is threatening, the officer can make an arrest and call for an interpreter to be available at the booking station.

Do you have to take a sign language interpreter to a call about a violent crime in progress or a similar urgent situation involving a person who is deaf? No. An officer's immediate priority is to stabilize the situation. If the person being arrested is deaf, the officer can make an arrest and call for an interpreter to be available later at the booking station.

Contact numbers for your local sign language interpreters:

_____

_____

_____

_____

U.S. Department of Justice
Civil Rights Division
Disability Rights Section

Americans with Disabilities Act

ADA Checklist for Emergency Shelters

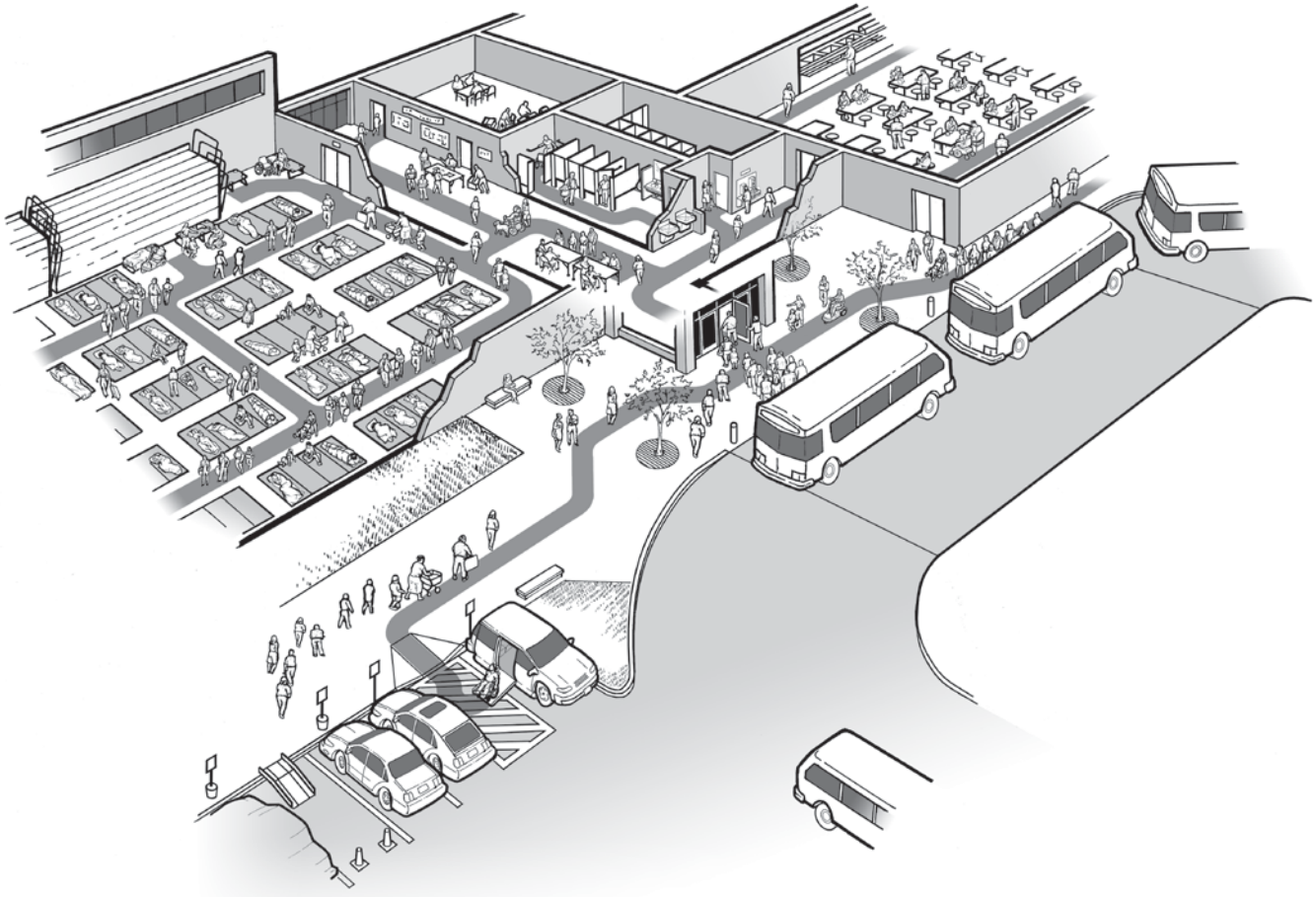

July 26, 2007

Reproduction

Reproduction of this document is encouraged. Additional copies of this publication may be obtained, viewed or downloaded from the Publications section of the ADA Website (www.ada.gov) or by calling the ADA Information Line at 800-514-0301 (voice), 800-514-0383 (TTY).

Disclaimer

The ADA authorizes the Department of Justice to provide technical assistance to individuals and entities that have rights or responsibilities under the Act. This document provides informal guidance to assist you in understanding the ADA and the Department's regulation. However, this technical assistance does not constitute a legal interpretation of the statute.

Table of Contents

ADA Checklist for Emergency Shelters 1
A. Evaluating the Physical Accessibility of Emergency Shelters 1
B. Conducting Accessibility Surveys 2
C. Getting Started 2
D. Tools Needed 3
E. Taking Measurements 3
1. Sloped Surfaces 3
2. Using the Tape Measure 4
3. Measuring Door Openings 5
F. Taking Photographs 5
G. Completing the Survey and Checklist 5
H. After Completing the Survey and Checklist 6

Step One: Accessible Shelter Quick-Check Survey 7
Selecting Sites to Survey for Accessibility 7
A. Accessible Entrance 7
B. Accessible Routes To All Service/Activity Areas 8
C. Accessibility within Toilet Rooms 10

Step Two: Ada Checklist For Emergency Shelters 11
Getting to the Emergency Shelter 11
A. Passenger Drop-Off Areas 11
B. Parking 14
1. Typical Issues 14
2. Parking Spaces Checklist 15
3. Temporary Solutions for Emergency Sheltering - Parking 18
C. Sidewalks and Walkways 19
1. Typical Issues for Individuals Who Use Wheelchairs, Scooters, or other Mobility Devices 19
Accessible Ramp Features 21
Temporary Solutions For Emergency Sheltering - Ramps 22
2. Typical Issues for Individuals Who Are Blind or Have Low Vision 24
Temporary Solutions For Emergency Sheltering - Protruding Object Hazards 26
D. Entering the Emergency Shelter 27
Building Entrance 27
E. Hallways and Corridors 30
1. Typical Issues for Individuals Who Use Wheelchairs, Scooters, or Other Mobility Devices 30
2. Typical Issues for People Who are Blind or Have Low Vision 37
F. Check-In Areas 39

Living at the Emergency Shelter 40
G. Sleeping Areas 40
H. Restrooms and Showers 42
Toilet Stalls 46
I. Public Telephones 50
J. Drinking Fountains 52
K. Eating Areas 54

Other Issues 56
L. Availability of Electrical Power 56
M. Single-User or "Family" Toilet Room 57
N. Health Units/Medical Care Areas 62
O. Accessible Portable Toilets 63

ACCESSIBLE EMERGENCY SHELTERS

One of the most important roles of State and local government is to protect people from harm, including helping people obtain food and shelter in major emergencies. When disasters occur, people are often provided safe refuge in temporary shelters located in schools, office buildings, tents, or other facilities. Advance planning for an emergency shelter typically involves ensuring that the shelter will be well stocked with basic necessities, such as food, water, and blankets. Planning should also involve ensuring that these shelters are accessible to people with disabilities. Making emergency sheltering programs accessible is generally required by the Americans with Disabilities Act of 1990 (ADA).

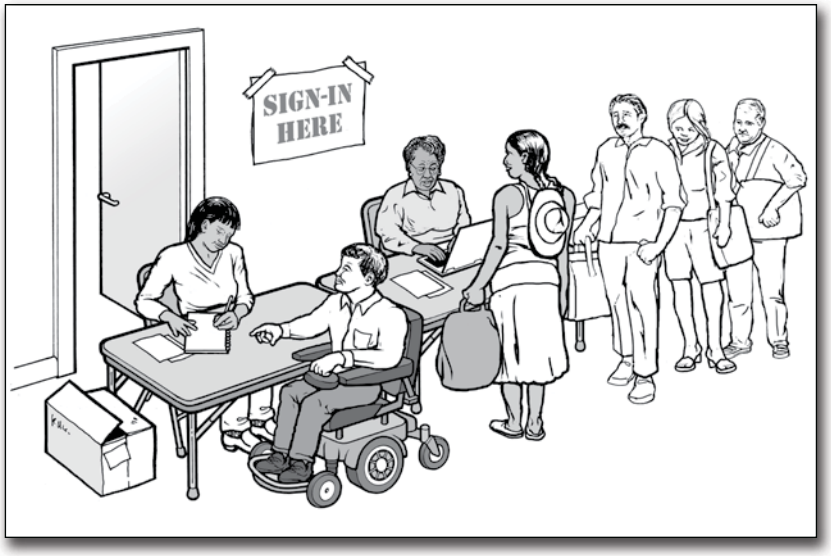

A. Evaluating the Physical Accessibility of Emergency Shelters

In order to be prepared for an emergency that requires sheltering, accessible features should be part of an emergency shelter. A first step to providing an accessible shelter is to identify any physical barriers that exist that will prevent access to people with disabilities. One good way to do this is to inspect each shelter facility that your community plans to use in an emergency and identify barriers to people with disabilities, including people who use wheelchairs or scooters or who have difficulty walking, people who are deaf or hard-of-hearing, and people who are blind or who have low vision. Facilities built or extensively altered since the ADA went into effect in 1992 may have few barriers to accessibility and could be good choices for emergency shelters. Facilities built before 1992 and not altered to provide accessibility may have barriers that prevent access to people with disabilities.

When evaluating physical accessibility in older facilities, it may be a good idea to do the analysis in two parts. If you suspect that an older facility is not accessible, you can do a preliminary analysis before completing a detailed accessibility survey. This preliminary analysis, or quick-check, can eliminate facilities with extensive barriers so that the focus can be on those facilities that are most appropriate to become accessible shelters. To help identify older

buildings that may be good candidates to become accessible shelters, a copy of the Accessible Shelter Quick-Check Survey is provided **on page 7.** After completing the Quick-Check Survey, if you have checked "Yes" for most of the questions on the forms, you should conduct a full accessibility survey using the ADA Checklist for Emergency Shelters.

If you find barriers to accessibility after completing the checklist, the next step is to either remove the barriers or identify other nearby accessible facilities that can serve as a shelter. In communities with more than one emergency shelter, until all shelters are accessible, the locations of accessible shelters should be widely publicized, particularly to people with disabilities and organizations that serve the disability community.

B. Conducting Accessibility Surveys

The following Quick-Check Survey (beginning on page 7) and the ADA Checklist for Emergency Shelters (beginning on page 11) are designed to assist State and local officials and operators of emergency shelters to determine whether a facility being considered for use as an emergency shelter is accessible and if not, whether modifications are needed to remove barriers or whether relocation to another accessible facility is necessary. Filling out the Quick-Check Survey will provide guidance on whether a facility has certain basic accessible features, and filling out the detailed ADA Checklist for Emergency Shelters will provide specific information on any barriers to accessibility.

C. Getting Started

Individuals conducting the surveys need not be experienced in evaluating facilities for accessibility. The checklist provides guidance on how to complete the survey and will prompt the user to check key elements. The checklist pages also provide space for notes and other key information. The checklist is designed to prompt the user to check key features by asking questions about sizes, sloped surfaces, and availability of accessible features; and in some areas, it suggests alternatives if a physical barrier is identified. By following the directions provided for filling out the checklist, staff can identify accessible shelters and develop information needed to implement temporary and permanent accessibility modifications.

An evaluation of shelter accessibility should focus on those areas of the facility that may be used for providing shelter in an emergency. These include areas where people are dropped off by a bus, van, or car; the parking area; the entrance to the shelter; pedestrian routes (both exterior and interior); sleeping, eating, information, and recreational areas; and toilet rooms.

Before shelter accessibility is evaluated, it is useful for staff to review the instructions for filling out the checklist and become familiar with the questions. It is also helpful to practice taking measurements, photographs, and recording information.
On the day of the survey, it is helpful to first become familiar with certain areas before starting to record information. Upon arrival at the proposed shelter, first find the areas where people will disembark from vehicles, both passenger drop-off and loading zones as well

as parking areas. Next find the entrances to the shelter areas that will be used during an evacuation. If possible, take an identifying "location" photograph that shows the name of the facility and the address so that other photographs can be identified correctly. When inside the building, locate the areas where people are likely to register, sleep, and eat. Locate the toilet rooms that serve the shelter area. It is also a good idea to locate any areas used for telephones, food distribution, and medical services.

D. Tools Needed

The following items are needed for the survey:

- A metal tape measure that is at least 20 feet long;
- A digital level or bubble level that is 24 inches long;
- A door pressure gauge;
- A digital (preferred) or film camera with a flash;
- One copy of the checklist for each shelter (and Quick-Check Survey if used); and
- A clipboard and pens.

If you are not familiar with taking the types of measurements needed to complete the checklist, review the following section and practice using the tools before going to conduct a survey.

E. Taking Measurements

1. Sloped Surfaces

Measuring the slope of a ramp, parking space, walkway, or other ground or floor surface is important to identify whether the surface is accessible. The amount of slope or grade is described as the proportion of a vertical rise to a horizontal length. It is usually described as:

- a ratio (e.g., 1:20, which means one unit of vertical rise for each 20 units of horizontal length); or
- a percentage (e.g., 8.33% which equates to a ratio of 1:12 or 4.76 degrees).

The easiest way to measure slope is to use a digital level. The digital display gives a reading that may be shown as a percent, degrees, or as a digital bubble. Before using a digital level, make sure to understand the directions for its use. It will need to be calibrated before each use. The maximum running slope generally allowed for ramps is 1:12 (8.33% or 4.76 degrees). Cross slope is the slope or grade of a surface perpendicular to the running slope. The most cross slope allowed on an accessible route is 1:50 (2% or 1.15 degrees).

Another way to measure slope that requires more effort is to use a 24-inch level with leveling bubble and a metal tape measure. Place the level on the sloped surface in the direction you wish to measure. Rest one end of the level at the highest point of the sloped surface and lift the other end (see below) until the bubble is in the middle of the tube. This is the "level" position. While the level is in this position, measure the distance between the end of the level and the sloped surface below. If the distance is two inches or less, then the slope is 1:12 or less. When the distance is more than two inches, record the distance on the checklist so the exact slope can be calculated later. For measuring cross slope, if the distance, measured from the level position, is ½ inch or less then the slope is 1:48 or less.

Measuring slope using a 24-inch bubble level and tape measure

2. Using the Tape Measure

A metal tape measure is needed to measure the length, width, height, and depth of various elements. When measuring long distances, pull the tape tight to get an accurate measurement. The checklist will offer guidance for the specific measurement that is required.

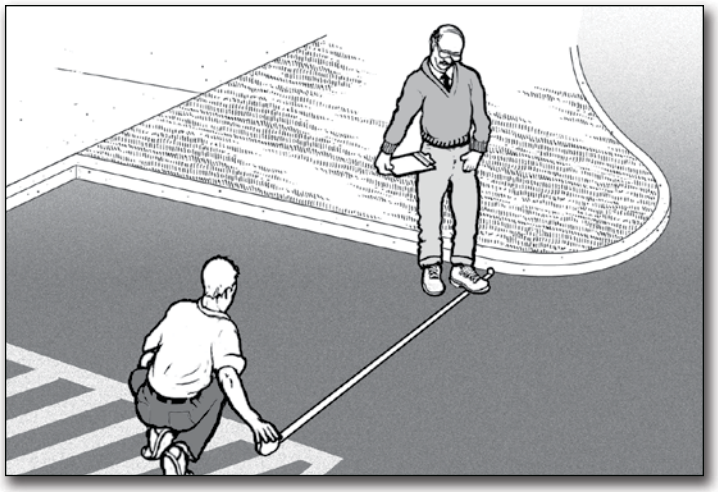

Using a tape measure to measure the width of a parking space

3. Measuring Door Openings

Special care is needed when measuring the clear opening of a doorway. To measure the clear opening of a standard hinged door, open the door to 90 degrees. Place the end of the tape measure on the side of the door frame next to the clear opening (see below). Stretch the tape across the door opening to the face of the door. This measures the clear width of the door opening through which people pass, which is less than the width of the door itself.

Measuring the clear opening from the face of the doorstop on the frame to the face of the open door

F. Taking Photographs

A comprehensive set of photographs makes it easier to understand existing conditions after the survey is completed. It is a good idea to take many photos of the exterior and interior of the potential shelter. It is likely that many other people in your decision-making process will need to review information about the facility you are surveying, so try to record each element that you survey with several photos. It is always useful to first take a photo that will clearly identify the location of the element so that others will easily be able to find the element. Then, take several close-up shots of that element to document the conditions you found during your survey. If you are not familiar with the camera that you plan to use, practice using it both indoors and outdoors before starting to survey the various facilities being considered for use as shelters. If you are using a digital camera, it is a good idea to review the images as you take them to ensure that you have good quality photographs.

G. Completing the Survey and Checklist

The survey and checklist forms will prompt you for what to look at and where to measure. You should write down all answers and notes for use later in the planning process. If a photo is taken of a particular element or condition, then you should note this on the checklist. It is usually more efficient for two or three people to work together doing these surveys. One person can measure while the other records the information and takes photos.

For each item, check either “Yes” or “No.” If the measurement or number falls short of that required for accessibility, write the measurement or number to the right of the question. Add notes or comments as needed. For some questions when “No” is the answer, the checklist will include a prompt to check for an alternate solution. Information on possible alternative solutions can be used later to decide how to better provide accessibility. Taking several photos is also helpful when the answer is “No” and an alternative way to provide accessibility is not readily apparent.

When completing the survey or checklist, try to answer every question in each section unless the element is not present at that facility. For example, if no parking lot is provided at the facility, (such as where only on-street parking is provided), do not measure the size of the on-street parking spaces.

Some sections of the checklist are divided into two parts, one for individuals with a mobility disability and the other for individuals who are blind or who have low vision. While evaluating a facility you will be checking to ensure that an accessible route is provided. The accessible route is a continuous unobstructed pedestrian path without steps or steep slopes that connects all accessible site and building features and spaces together. A continuous accessible route must be available at the shelter for people who use a wheelchair, scooter, or other mobility device. Other sections of the checklist ask questions related to individuals who are blind or have low vision. These questions cover all circulation paths, not just pedestrian paths that are also an accessible route.

The survey and the checklist are based on some of the requirements from the ADA Standards for Accessible Design (the Standards). Questions have been selected to reflect features that may be most important for the short-term stays common for emergency shelters. To learn more about the Standards, see the Department of Justice regulations, 28 C.F.R. Part 36, Appendix A. The regulations and the Standards are available at www.ada.gov. Copies are also available by calling the ADA Information Line at 800-514-0301 (voice) or 800-514-0383 (TTY).

H. After Completing the Survey and Checklist

Once you have completed the survey and filled out the checklist, you can determine which elements or spaces in a potential shelter facility are accessible and which may need modifications. If most answers are “yes,” the facility may need little or no modification. If some answers are “no,” modifications may be needed to remove barriers found in that space or element. Emergency shelters in older buildings with inaccessible features might be made accessible with temporary modifications, (such as portable ramps at the entrance and accessible parking spaces marked off by traffic cones) until permanent modifications can be made. However, where facilities are not capable of being made accessible, another facility will need to be selected for use as a shelter.

Step One: Accessible Shelter Quick-Check Survey

Notes/Comments

Selecting Sites to Survey for Accessibility

Providing an emergency shelter that is accessible to people with disabilities involves making sure that a number of accessible features and spaces are available. To verify accessibility before deciding on a site for an emergency shelter can involve asking many questions such as those in the ADA Checklist for Emergency Shelters. For some older buildings, especially those on hilly sites and those that have not been renovated, remodeled, or altered since 1992, before completing the detailed checklist, it may be better to do a pre-test that can rule out a facility with major accessibility problems so available resources can be focused on other locations. The following questions will help evaluate whether a facility has such major accessibility barriers. After this first step, buildings that do not have major accessibility problems should be surveyed more thoroughly, using the ADA Checklist for Emergency Shelters, to find out which, if any, barriers need to be removed to provide an accessible shelter.

A. Accessible Entrance

Having a way to get into the emergency shelter on a surface that is firm, stable, slip-resistant, without steps or steep slopes, and wide enough for a person using a wheelchair or other mobility aid is essential.

A1. Is there a sidewalk connecting the parking area and any drop off area to the walkway leading to the building? [ADA Standards § 4.1.3(1)] Yes _____ No _____

A2. Is there a route without steps from this sidewalk to the main entrance? Yes _____ No _____

If No, are there two or fewer steps? Yes _____ No ____ Number of Steps: _____

If No, is there another entrance without steps that is connected by a sidewalk to the parking or drop off area? Yes _____ No _____Location: _____

_____

B. Accessible Routes To All Service/Activity Areas

Notes/Comments

Everyone must be able to get to each of the various areas where activities and services take place. This includes people who use mobility devices, such as wheelchairs and scooters, being able to get to locations where supplies are distributed, to eating areas, to sleeping areas, to toilet rooms, and to other activity areas without encountering stairs or steep slopes.

Check all of the various ways to get to each of the areas where sheltering activities are likely to take place (sleeping, eating, supply distribution, bathrooms, etc.):

B1. Sleeping Area (Location: _____)

B1-a. Is there a route without steps from the accessible entrance to this location? Yes _____ No _____

If No, are there two or fewer steps? Yes ___ No ___Number of Steps: _____

If No, is there a ramp, lift, or elevator? Yes ___ No ___Type of device: _____

B1-b. If an elevator or lift provides the only accessible route, is there a source of backup power to operate the device for an extended period? Yes _____ No _____

B2. Eating Area (Location: _____)

B2-a. Is there a route without steps from the accessible entrance to this location? Yes _____ No _____

If No, are there two or less steps? Yes ___ No ____ Number of Steps: _____

If No, is there a ramp, lift, or elevator? Yes ___ No ____ Type of device: _____

B2-b. If an elevator or lift provides the only accessible route, is there a source of back up power to operate the device for an extended period? Yes _____ No _____

B3. Supply Distribution Area (Location: _____)

B3-a. Is there a route without steps from the accessible entrance to this location? Yes _____ No _____

If No, are there two or fewer steps? Yes ___ No ___ Number of Steps: _____

If No, is there a ramp, lift, or elevator? Yes ___ No ___Type of device: _____

B3-b. If an elevator or lift provides the only accessible route, is there a source of backup power to operate the device for an extended period? Yes _____ No _____

B4. Toilet Rooms (Location: _____)

B4-a. Is there a route without steps from the accessible entrance to this location? Yes _____ No _____

If No, are there two or fewer steps? Yes ___ No ____ Number of Steps: _____

If No, is there a ramp, lift, or elevator? Yes ____ No ____Type of device: _____

B4-b. If an elevator or lift provides the only accessible route, is there a source of backup power to operate the device for an extended period? Yes _____ No _____

Notes/Comments

C. Accessibility Within Toilet Rooms

Notes/Comments

C1-a. Is there an area within the toilet room where a person who uses a wheelchair or mobility device can turn around - either a minimum 60-inch diameter circle or a "T"-shaped turn area? [ADA Standards §§ 4.22.3; 4.2.3, Fig. 3] Yes _____ No _____

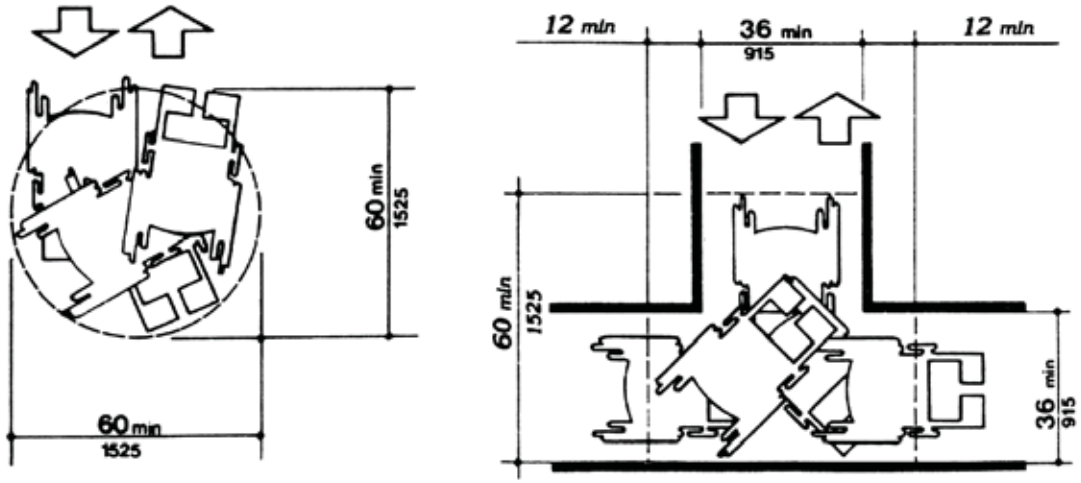

Fig 3
Minimum spaces for turning

C1-b. Is at least one stall at least 60 inches wide and 56 inches deep (wall mounted toilet) or 59 inches deep (floor mounted toilet)? [ADA Standards § 4.17.3] Yes _____ No _____

Using The Information:
If most of your answers to the previous questions are Yes, then the facility has some basic accessibility features and should be surveyed using the ADA Checklist for Emergency Shelters. Whenever most of your answers are No, then these problems should be evaluated before conducting a more detailed survey, or perhaps you should consider another location to serve as an emergency shelter.

STEP TWO — ADA CHECKLIST FOR EMERGENCY SHELTERS

Getting to the Emergency Shelter

A. Passenger Drop-Off Areas

During an evacuation the most efficient method of transporting people to shelters likely will include using vans and buses. Accessible buses and vans with wheelchair lifts will be needed to transport people who use wheelchairs, scooters, or other mobility aids. When they arrive at the shelter, an accessible drop-off area (also known as a passenger loading zone) is needed for people using mobility aids to get off of the bus or van and proceed to the shelter's accessible entrance.

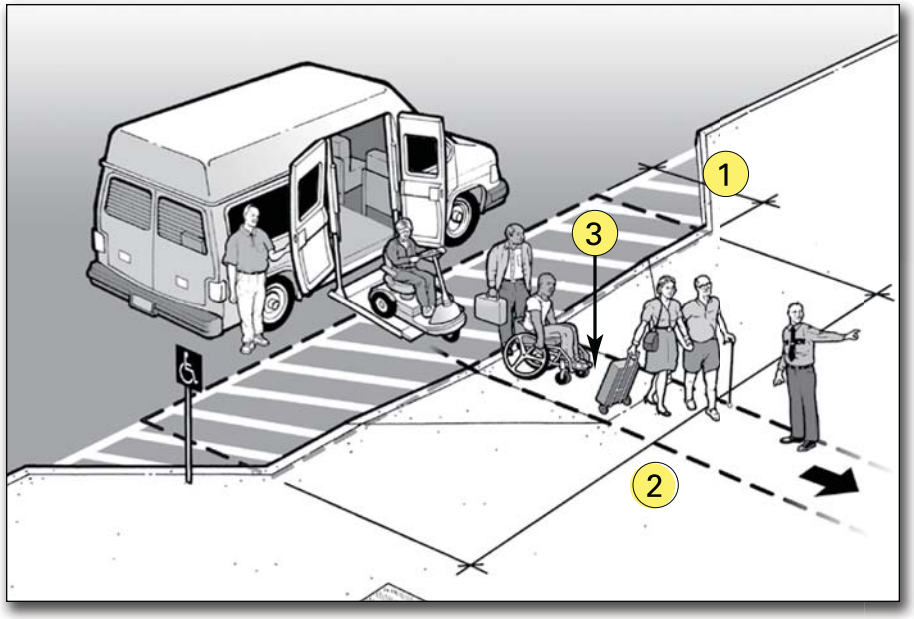

Accessible drop-off area with an access aisle provided at the same level as the vehicle.

An accessible drop-off area must have a level access aisle that is adjacent and parallel to the vehicle space. Where a curb separates the vehicle space from the access aisle or the access aisle from an accessible route, a curb ramp must be provided so people with mobility disabilities can get to the accessible route leading to the accessible entrance of the shelter.

Notes:

1. Access aisle depth is at least 5 feet.
2. Access aisle length is at least 20 feet.
3. Curb ramp connects the access aisle for the accessible drop- off area (which is at the level of the parking lot) to the accessible route to the accessible entrance of the shelter.

The access aisle may be at the parking-lot level or at sidewalk level. If the access aisle is at the parking-lot level, the curb ramp is provided between the access aisle and the sidewalk. If it is at the sidewalk level, an adjacent curb ramp is provided between the street and the sidewalk.

A1. Is a relatively level (1:50 or 2% maximum slope in all directions) access aisle provided adjacent and parallel to the side of the vehicle pull-up area? [ADA Standards § 4.6.6]

If No, look for another relatively level location that is on an accessible route to the accessible shelter entrance that could be used.

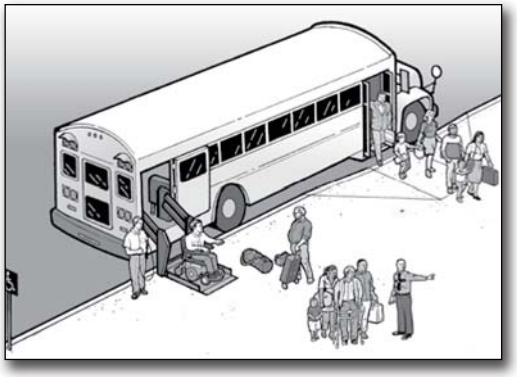

Accessible drop-off area with an access aisle provided as part of the sidewalk.

Yes _____ No _____

A2. Is the vehicle pull-up area relatively level (1:50 or 2% maximum slope in all directions)? Yes _____ No _____

A3. Is the area for the access aisle at least 5-feet wide and 20-feet long? [ADA Standards § 4.6.6]. Yes _____ No _____

Note: Unlike at an accessible parking space, the surface for the access aisle of an accessible passenger drop-off area does not have to be marked or striped.

A4. Is there vertical clearance of at least 114 inches (9 feet 6 inches) from the site entrance to the vehicle pull-up area, the access aisle, and along the vehicle route to the exit? [ADA Standards § 4.6.5] Yes _____ No _____

Notes/Comments

			Notes/Comments
A5.	Is a curb ramp provided between the vehicle pull up area and the access aisle (see above) or the access aisle and the accessible route to the accessible entrance? [ADA Standards § 4.6.6] If No, is there another area with a curb ramp and on an accessible route that could serve as the drop-off area? If there is no curb ramp near the drop-off area, can a temporary ramp be used to connect the drop-off area access aisle to the accessible route to the accessible shelter entrance?	Yes _____ No _____	
A6.	If a curb ramp is provided, is the running slope of the ramp surface (not counting the side flares) no more than 1:12 or 8.33%? [ADA Standards § 4.7.2]	Yes _____ No _____	
A7.	Is the width of the curb ramp surface at least 36 inches (not counting the side flares)? [ADA Standards § 4.7.3]	Yes _____ No _____	
A8.	Does an accessible route connect the curb ramp to the shelter's accessible entrance? [ADA Standards § 4.1.2(1)]	Yes _____ No _____	

B. Parking

1. Typical Issues

During an evacuation, some individuals with a mobility disability may arrive at the shelter in a car or van. When parking areas are provided at the shelter site, accessible parking spaces must be provided. Individuals with disabilities who arrive at the shelter in their own car or van need to be able to park in an accessible parking space close to an accessible entrance. Accessible parking spaces need an adjacent access aisle that provides space for a person with a mobility disability to exit their vehicle. The access aisle connects directly to an accessible route that leads to an accessible building entrance. In order to be usable, the access aisle must be relatively level, clear of gravel or mud, and the surface must be in good condition without wide cracks or broken pavement.

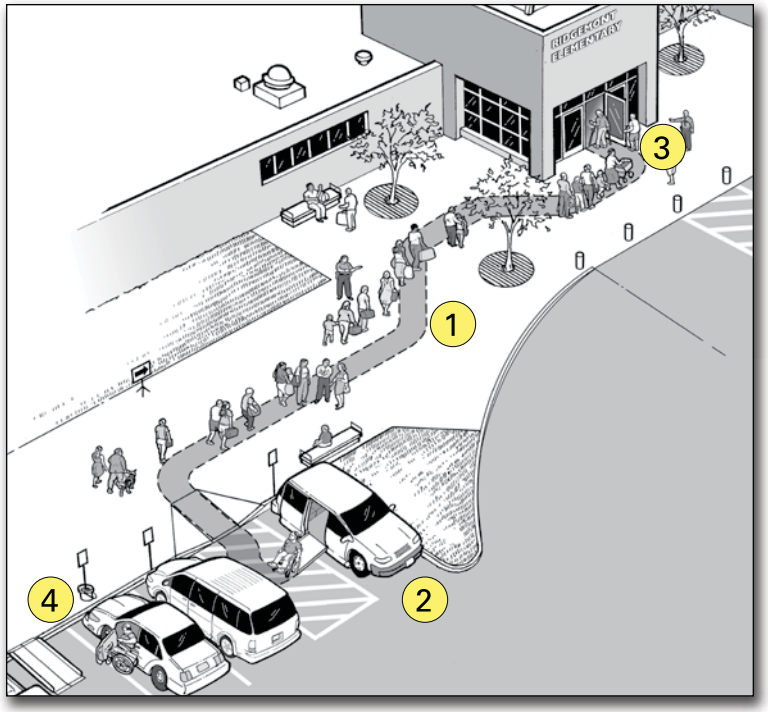

An accessible entrance to an emergency shelter with accessible parking and additional temporary accessible parking spaces

An accessible route connects the permanent access aisle of each accessible parking space with the accessible entrance to the shelter. When an accessible route crosses a curb, a curb ramp must be provided. During an emergency, as a temporary measure, if additional accessible parking spaces are needed, a portable ramp can be provided in a parking space marked off by traffic cones to provide two additional accessible parking spaces (see page 18).

Notes:

1. Accessible route.
2. Accessible parking with van accessible parking space.
3. Accessible entrance to shelter.
4. Temporary accessible parking spaces.

2. Parking Spaces Checklist

Notes/Comments

B1. When parking areas are provided at the shelter site, count the total number of parking spaces provided in each area. Is the minimum number of accessible parking spaces provided, based on the total number of available parking spaces (see table below)? [ADA Standards § 4.1.2(5)(a)] Yes _____ No _____

Total Number of Parking Spaces in Each Parking Area	Required Minimum Number of Accessible Spaces
1 - 25	1 van-accessible space w/min. 96-inch-wide access aisle (van space)
26 - 50	1 space w/min. 60-inch-wide access aisle + 1 van space
51 - 75	2 spaces w/min. 60-inch-wide access aisle + 1 van space
76 - 100	3 spaces w/min. 60-inch-wide access aisle + 1 van space
101 - 150	4 spaces w/min. 60-inch-wide access aisle + 1 van space

If more than 150 parking spaces are provided in a particular lot, see section 4.1.2 of the ADA Standards for the number of accessible parking spaces required.

B2. Does each accessible parking space have its own, or share, an adjacent access aisle that is least 60 inches (5 feet) wide? [ADA Standards § 4.6.3] Yes _____ No _____

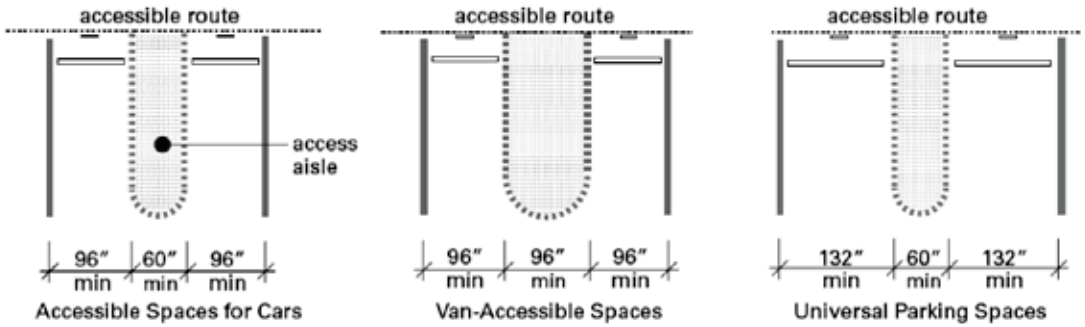

Accessible Parking Spaces Showing Minimum Width of Vehicle Space and Access Aisle

			Notes/Comments
B3.	Is there at least one van-accessible parking space provided with an access aisle that is at least 96 inches (8 feet) wide or are universal parking spaces provided that are 132 inches (11 feet) wide for vehicle space with a 60-inch (5-feet) wide access aisle? [ADA Standards § § 4.1.2(5), A4.6]	Yes _____ No _____	
B4.	For van-accessible spaces (particularly in a garage or parking structure), is there ***vertical*** clearance of at least 98 inches (8 feet - 2 inches) for the vehicle route to the parking space, the parking space, the access aisle, and along the vehicle route to the exit? [ADA Standards § 4.6.5] If No: Can the route be cleared by removing or raising low objects, or can each van-accessible parking space be relocated?	Yes _____ No _____	
B5.	Are all accessible parking spaces, including the access aisle, relatively level (1:50 or 2%) in all directions? [ADA Standards § 4.6.3] If No: Look for a nearby area that is relatively level in all directions that could serve as an accessible parking space with an accessible route to the accessible entrance to the shelter.	Yes _____ No _____	
B6.	Does each accessible parking space have a sign with the symbol of accessibility that is visible when a vehicle is parked in the space? [ADA Standards § 4.6.4]	Yes _____ No _____	

B7. If there is a curb between the access aisle and the accessible route to the building, is there a curb ramp that meets the following requirements: [ADA Standards § 4.7] Yes _____ No _____

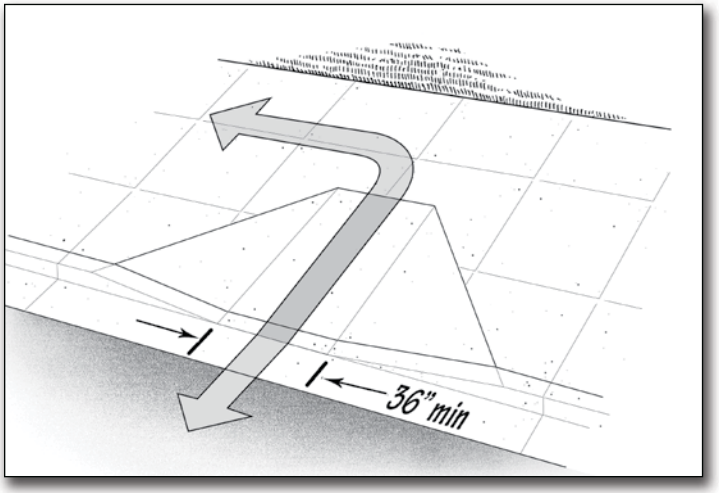

Curb ramp showing minimum 36-inch width for ramp section and 1:12 slope on ramp section.

B7-a. Is the curb ramp surface at least 36 inches wide, excluding flared sides? [ADA Standards § 4.7.3] Yes _____ No _____

B7-b. Is the slope (up or down the ramp) no more than 1:12? [ADA Standards § 4.7.2] Yes _____ No _____

Note: 1:12 is one inch of vertical height for each 12 inches of length.

B8. Are the accessible parking spaces serving the shelter on the shortest accessible route to the accessible entrance? [ADA Standards § 4.6.2] Yes _____ No _____

B9. Does each access aisle connect to an accessible route from the parking area to the shelter's accessible entrance? [ADA Standards § 4.6.2] Yes _____ No _____

Notes/Comments

3. Temporary Solutions for Emergency Sheltering - Parking

Problem: Parking at the shelter facility either has no accessible parking, not enough accessible parking, or accessible parking spaces are not on level ground.

Suggestion: Find a fairly level parking area near the accessible entrance and mark the area for accessible parking spaces. Three regular parking spaces will make two accessible parking spaces with a shared access aisle. Provide a sign designating each accessible parking space. Ensure there is an accessible route from each access aisle to the accessible entrance.

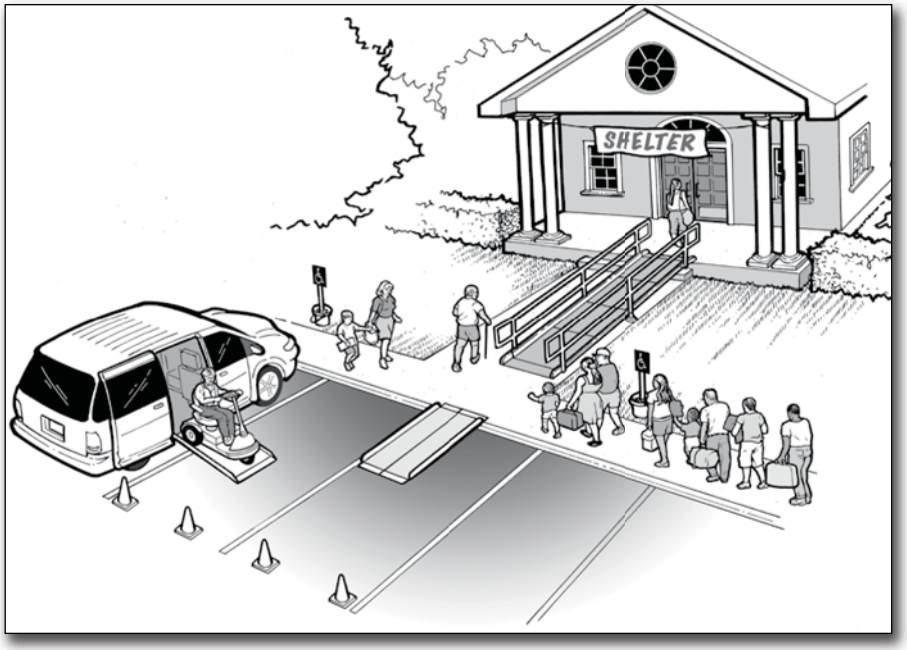

Three standard parking spaces are converted into an accessible parking space with an access aisle. Cones mark the access aisle and a temporary curb ramp with edge protection connects to an accessible route to the shelter.

If temporary accessible spaces are used, mark the temporary accessible parking spaces with traffic cones or other temporary elements. Traffic cones can also be used to mark off an access aisle if designated accessible parking spaces lack an access aisle or if the access aisle is too narrow. At least one accessible parking space should be a van-accessible parking space with an access aisle that is at least 96 inches wide.

C. Sidewalks and Walkways

1. Typical Issues for Individuals Who Use Wheelchairs, Scooters, or other Mobility Devices

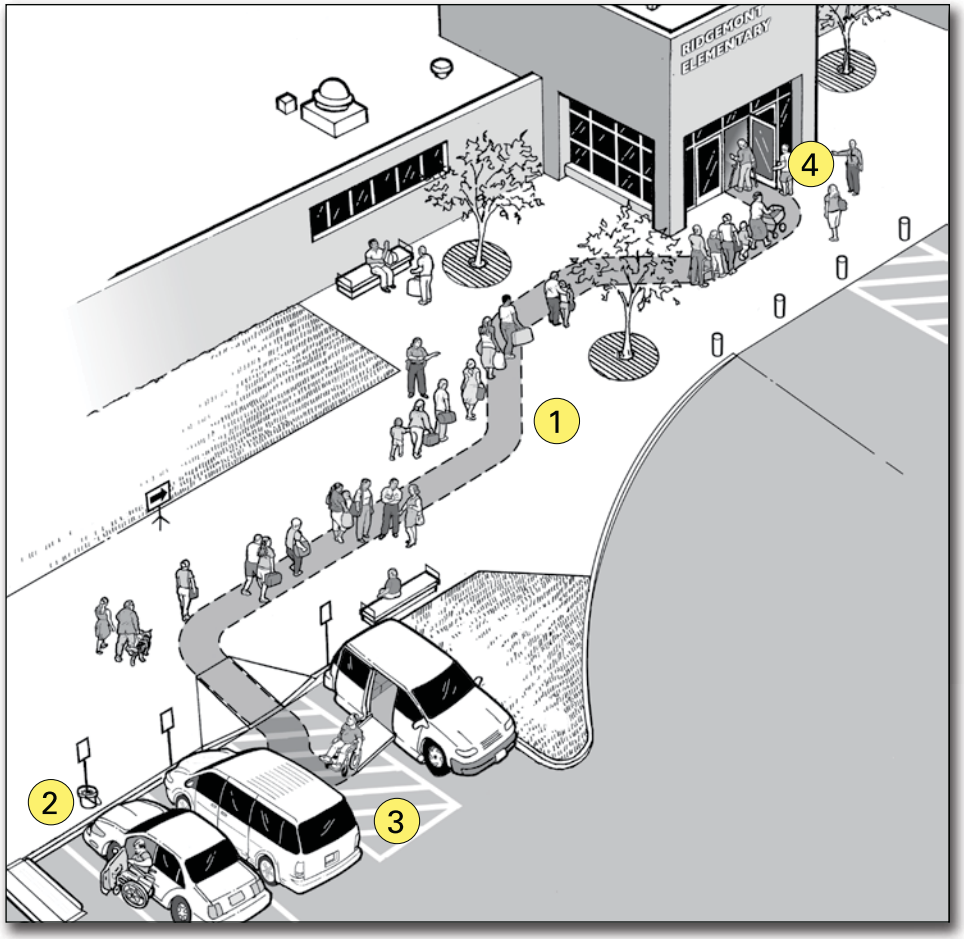

An accessible entrance to a shelter with accessible parking and an accessible drop-off area

An accessible route connects accessible passenger drop-off areas, accessible parking spaces, and other accessible elements, like a route from a bus stop, to an accessible building entrance. The accessible route is essential for people who have difficulty walking or who use wheelchairs or other mobility aids to get to the accessible entrance of the shelter. The accessible route must be at least 36 inches wide (it may narrow briefly to 32 inches wide where utility poles, signs, etc. are located along the accessible route). Abrupt level changes, steps, or steep running or cross slopes cannot be part of an accessible route. Where ramps are used, they cannot be steeper than 1:12. Ramps with a vertical rise of more than 6 inches must have handrails on both sides. Ramps must also have edge protection to stop wheelchairs from falling off the sides, and level landings at the top and bottom of each segment and where the ramp changes direction.

Notes:

1. Accessible route
2. Accessible drop-off area
3. Accessible parking with van-accessible parking space
4. Accessible entrance to shelter

			Notes/Comments
C1-a.	Is an accessible route provided from accessible parking spaces to the accessible entrance of the shelter? [ADA Standards § 4.1.2(1), 4.3]	Yes _____ No _____	
C1-b.	Is an accessible route provided from public sidewalks and public transportation stops on the shelter site (if provided) to the accessible entrance for the shelter? [ADA Standards § 4.1.2(1)] *Note: The accessible route is at least 36 inches wide and may be a portion of a sidewalk.*	Yes _____ No _____	
C1-c.	Is the accessible route at least 36 inches wide? [ADA Standards § 4.3.3] If No, does the accessible route narrow to 32 inches for no more than 2 feet?	Yes _____ No _____	
C1-d.	Is the accessible route free of steps and abrupt level changes higher than 1/2 inch? [ADA Standards § 4.3.8] *Note: Level changes between 1/4 inch and 1/2 inch should be beveled (sloped) at 1:2 maximum.*	Yes _____ No _____	
C1-e.	Where an accessible route crosses a curb, is a curb ramp provided? [ADA Standards § 4.3.8]	Yes _____ No _____	
e-i.	Is the curb ramp surface at least 36 inches wide, excluding flared sides? [ADA Standards § 4.7.3]	Yes _____ No _____	
e-ii.	Is the running slope (up or down the ramp) no more than 1:12? [ADA Standards § 4.7.2] *Note: 1:12 is one inch of vertical height for 12 inches of horizontal distance.*	Yes _____ No _____	
C1-f.	If the slope of part of the accessible route is more than 1:20, does it meet the following requirements for an accessible ramp?	Yes _____ No _____	

			Notes/Comments
f-i.	Is the running slope no greater than 1:12? [ADA Standards § 4.8.2] *Note: For existing ramps, the slope may be 1:10 for a 6-inch rise and 1:8 for a 3-inch rise in special circumstances (see ADA Standards § 4.1.6(3)).*	Yes _____ No _____	
f-ii.	Are handrails installed on both sides of each ramp segment? [ADA Standards § 4.8.5]	Yes _____ No _____	
f-iii.	Is the ramp width, measured between the handrails, at least 36 inches? [ADA Standards § 4.8.3]	Yes _____ No _____	
f-iv.	Does the ramp have a level landing at the top and bottom of each ramp section that is at least 60 inches long? [ADA Standards § 4.8.4] *Note: The level landing may be part of the sidewalk or walking surface.*	Yes _____ No _____	

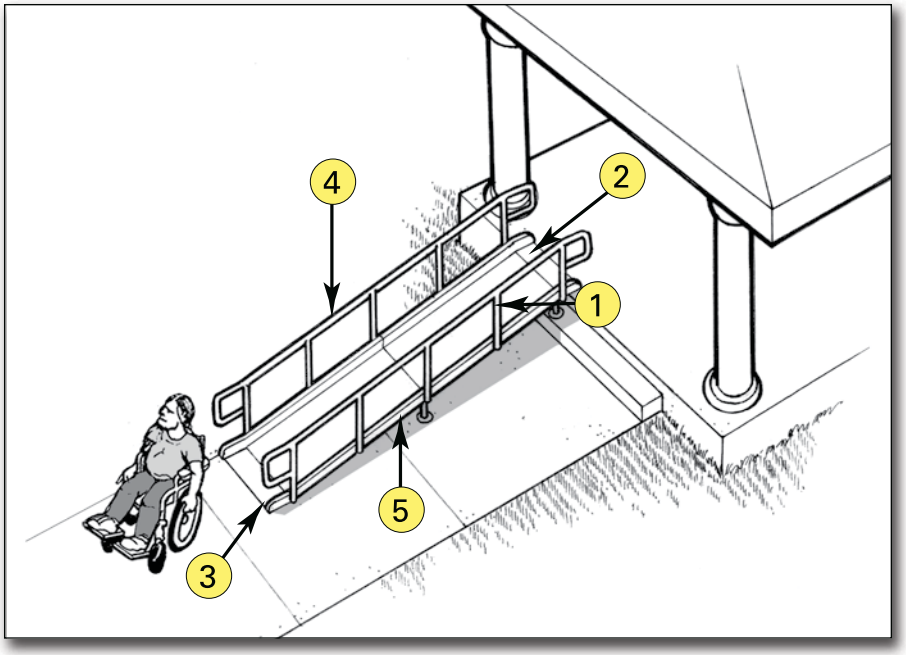

Notes:

1. At least 36 inches between handrails
2. Top landing part of walk
3. Bottom landing part of walk
4. Handrail height 34 to 38 inches
5. Edge protection.

			Notes/Comments
f-v.	If a ramp is more than 30 feet long, is a level landing at least 60 inches long provided at every 30 feet of horizontal length? [ADA Standards § 4.8.4] *Note: if the running slope is less than 1:16 but more than 1:20, each ramp segment may be up to 40 feet long followed by a level landing].*	Yes _____ No _____	
f-vi.	Is there a level landing, at least 60 inches x 60 inches, when a ramp changes direction? [ADA Standards § 4.8.4]	Yes _____ No _____	
f-vii.	Are the handrails mounted 34 to 38 inches above the ramp surface? [ADA Standards § 4.8.5]	Yes _____ No _____	
f-viii.	If the ramp or landing has a vertical drop-off on either side, is edge protection provided? [ADA Standards § 4.8.7]	Yes _____ No _____	

Temporary Solutions For Emergency Sheltering - Ramps

Problem: The sidewalk connecting parking to the shelter entrance is too steep to be accessible.

Suggestion: Check to see if there is another accessible route to the accessible entrance. Sometimes there is a less direct route that is accessible. During an evacuation it will be helpful to put up signs or to have volunteers stationed at the accessible parking spaces to direct people along this less direct, but nonetheless accessible, route.

Problem: The accessible route crosses a curb but no curb ramp is provided.

Suggestion: Install a portable ramp with a slope no steeper than 1:12 with edge protection. Store the portable ramp on site so it can be easily accessed in an emergency.

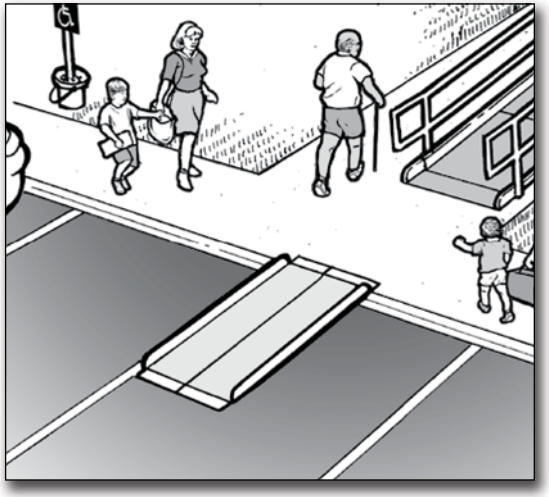

A portable ramp with edge protection is installed over a curb to provide an accessible route.

Problem: There are two steps where the sidewalk connects to the accessible entrance.

Suggestion: Install a portable ramp with a slope no steeper than 1:12 with edge protection and handrails on both sides of the ramp. Store the portable ramp and components on site so everything can be easily accessed in an emergency.

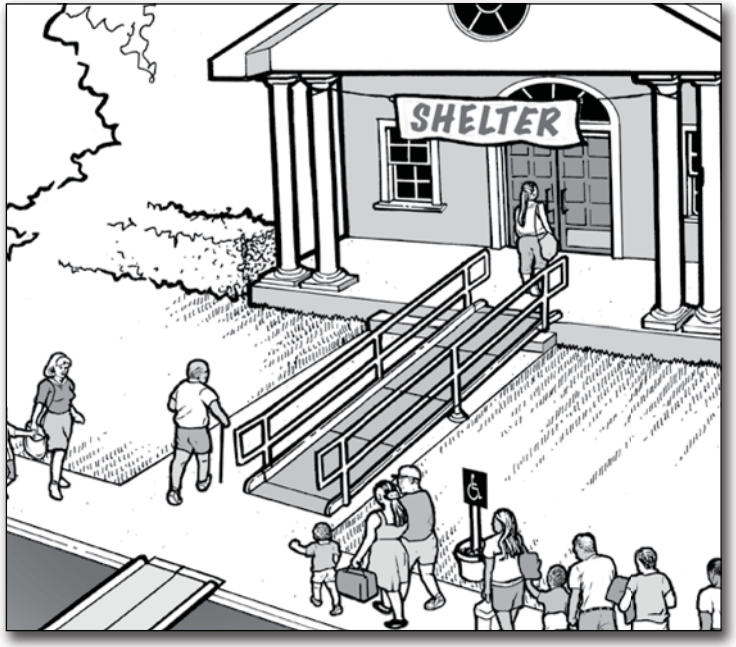

A portable ramp with edge protection and handrails is installed over two steps to provide an accessible route.

2. Typical Issues for Individuals Who Are Blind or Have Low Vision

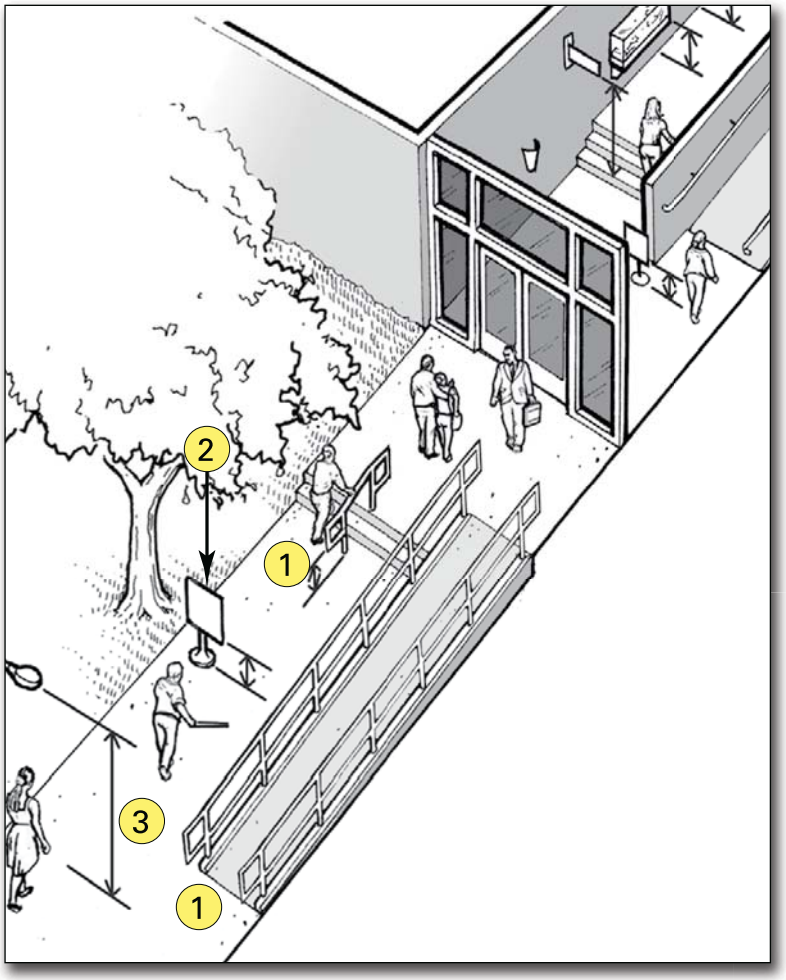

Common objects along pedestrian routes to a shelter that can be hazards to people who are blind or have low vision.

Objects that are wall mounted, that project into a pedestrian route from the side, or that are overhead can be hazards to people who are blind or who have low vision. These objects must be positioned so people will either detect the objects before they run into them or safely pass under them. Examples may include handrail extensions on stairs and ramps, post- or wall-mounted signs, drinking fountains, and low hanging tree limbs. Pedestrian routes open to people during the time that the facility is being used as an emergency shelter, such as sidewalks, courtyards, and plazas, must be free of overhanging objects that are less than 80 inches above the route. Objects more than 27 inches and less than 80 inches above the route and that protrude from the side more than 4 inches are also a hazard. Since people can walk on any sidewalk, not just the accessible routes, all exterior pedestrian routes serving or leading to the shelter areas must be checked. The following questions apply to sidewalks and walkways leading to the emergency shelter.

Notes:

1. The bottom of the handrail extensions turn down to 27 inches or less above the route so a person who is blind or has low vision can detect the hazard before running into it.

2. Signs or other objects in the pedestrian route can be a hazard if the bottom is more than 27 inches but less than 80 inches above the route.

3. Objects that overhang the pedestrian route must be at least 80 inches above the route.

C2-1. Are all sidewalks and walkways to the shelter free of any objects (e.g., wall-mounted boxes, signs, handrail extensions) with bottom edges that are between 27 inches and 80 inches above the walkway and that extend more than 4 inches into the sidewalk or walkway? [ADA Standards §§ 4.4, 4.2.1(3), 4.1.3(2)]

If No, can the object be lowered, removed, or modified or can the route be moved so that the object can be avoided?

Yes _____ No _____

C2-2. Are the undersides of exterior stairs enclosed or protected with a cane-detectable barrier so that people who are blind or have low vision will not hit their heads on the underside? [ADA Standards § 4.4.2]

If No, can a barrier or enclosure be added below the stair or can the route be relocated away from the stair?

Yes _____ No _____

When the underside of a stair is open, it is a hazard to people who are blind or have low vision. Enclosing the area below the stair or installing a cane-detectable barrier helps this woman to stop before hitting her head.

Notes/Comments

C2-3. Are all objects that hang over the pedestrian routes at least 80 inches above the route? [ADA Standards § 4.4.2]
If No, can the objects be removed or relocated, or can a cane detectable object be added below that is at no higher than 27 inches?

Yes _____ No _____

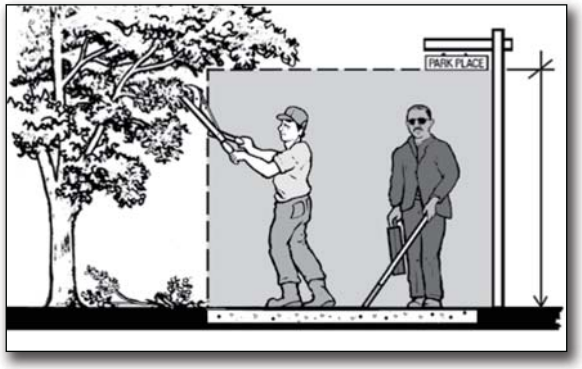

Overhead sign and tree branches are least 80 inches above the walk.

Notes/Comments

Temporary Solutions For Emergency Sheltering - Protruding Object Hazards

Problem: Objects protrude too far from the side into the route causing a hazard for people who are blind or who have low vision.

Suggestion: When people who are blind or who have low vision use a cane to detect hazards, objects located at 27 inches or lower are detectable. When an object is located higher than 27 inches above the ground it is a hazard if the object protrudes more than 4 inches into the circulation path. To make a protruding object cane detectable:

- Place an object below, or on either side of, the protruding object that is not higher than 27 inches above the ground.
- If the protruding object can be moved, lower the object so that its bottom is not more than 27 inches above the ground.
- Prune or alter the protruding object so it does not protrude above the route.

D. Entering the Emergency Shelter

Building Entrance

A shelter must have at least one accessible entrance that is on an accessible route. An accessible entrance must provide at least one accessible door with maneuvering space, accessible hardware, and enough clear width to allow people who use crutches, a cane, walker, scooter, or wheelchair to use it.

If the accessible entrance is not the main entrance to the facility that is being used as a shelter, signs must be located at inaccessible entrances to direct evacuees and volunteers to the accessible entrance. The accessible entrance must be unlocked when other shelter entrances are unlocked.

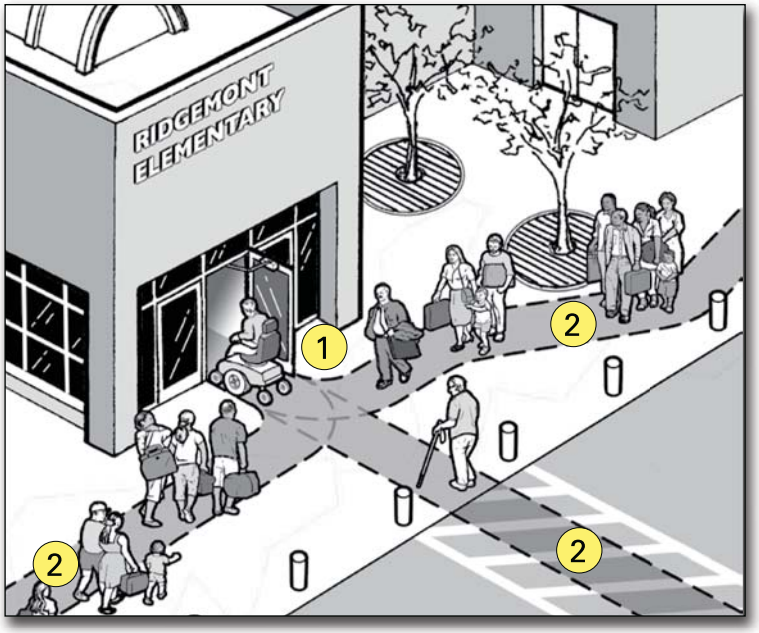

Notes:

1 Accessible entrance to the shelter.

2 Accessible route connecting accessible parking and drop-off area (if provided) to the accessible entrance.

Examples of signs for inaccessible shelter entrances directing people to the accessible entrance.

Notes/Comments

D1. Is there at least one accessible entrance connected to an accessible route? [ADA Standards § 4.1.3(1)] Yes _____ No _____

Notes: If this entrance is not the main entrance, it needs to be kept unlocked when other shelter entrances are unlocked.

If there are inaccessible entrances serving the shelter, signs will be needed at inaccessible entrance(s) to direct evacuees to the nearest accessible entrance.

D2. Does at least one door or one side of a double leaf-door provide at least 32 inches clear passage width when the door is open 90 degrees? [ADA Standards § 4.13.5] Yes _____ No _____

If No, does another entrance have an accessible door or can both doors be propped open during the evacuation? Other possible solutions are to enlarge the door opening, use a swing clear hinge, or, if a double-leaf door, replace with uneven width doors.

D3. Is the hardware (e.g., lever, pull, and panic bar) usable with one hand without tight grasping, pinching, or twisting of the wrist? [ADA Standards § 4.13.9] Yes _____ No _____

If No, leave door propped open, add new accessible hardware, or adapt/replace hardware.

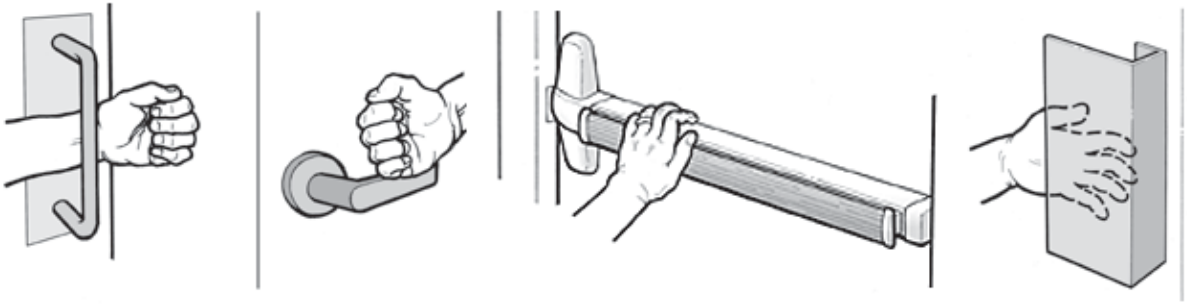

Examples of handles and door hardware that can be used without tight grasping, pinching, or twisting.

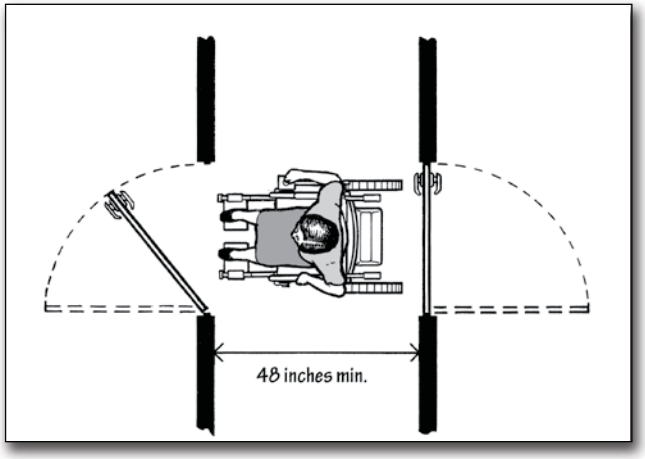

Minimum vestibule depth of 48 inches if both doors open out

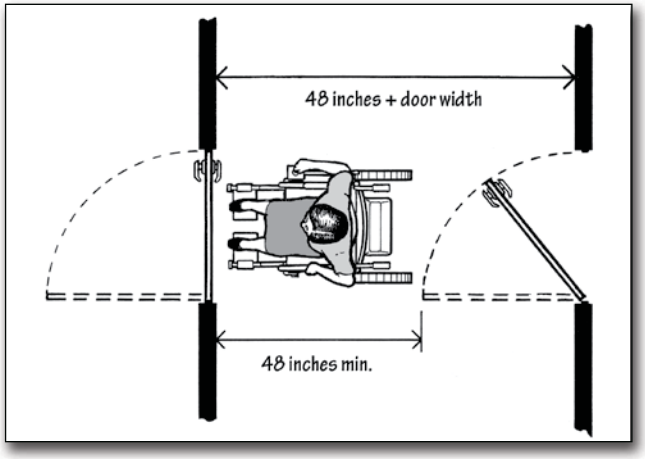

Minimum vestibule depth of 48 inches + door width when door swings into vestibule.

Notes/Comments

D4. On the latch, pull side of the door, is there at least 18 inches clearance provided if the door is not automatic or power-operated? [ADA Standards § 4.13.6, Fig. 25] Yes _____ No _____

If No, leave the door propped open or find another accessible entrance.

D5. If there is a raised threshold, is it no higher than 3/4 inch at the door and beveled on both sides? [ADA Standards §§ 4.1.6(3)(d)(ii), 4.13.8] Yes _____ No _____

If No, replace threshold with one with beveled sides or add a sloped insert.

D6. If an entry has a vestibule, is there a 30-inch by 48-inch clear floor space inside the vestibule where a wheelchair or scooter user can be outside the swing of a hinged door? [ADA Standards § 4.13.7] Yes _____ No _____

If No, leave the inner door permanently open, remove inner door, or modify the vestibule.

E. Hallways and Corridors

1. Typical Issues for Individuals Who Use Wheelchairs, Scooters, or Other Mobility Devices

The interior accessible route connects the accessible entrance with the various service and activity areas within the shelter. Typically made up of hallways, corridors, and interior rooms and spaces, the accessible route is essential for people who have difficulty walking or who use wheelchairs or other mobility aids to get to all of the service and activity areas of the shelter.

An accessible route is at least 36 inches wide and may narrow briefly to 32 inches wide where the route passes through doors or next to furniture and building elements. High thresholds, abrupt level changes, steps, or steep running or cross slopes cannot be part of an accessible route. Where ramps are used, they cannot be steeper than 1:12. Ramps with a vertical rise of more than 6 inches must have handrails on both sides. Ramps must also have edge protection to stop wheelchairs from falling off the sides, and level landings at the top and bottom of each segment and where a ramp changes direction.

Where an accessible route is different from the route used by most evacuees, signs will be needed at key decision points to direct individuals with disabilities to the various activity areas.

Notes:

1. Accessible Entrance
2. Accessible Route connects the accessible entrance with shelter service and activity area
3. Accessible door to service and activity areas

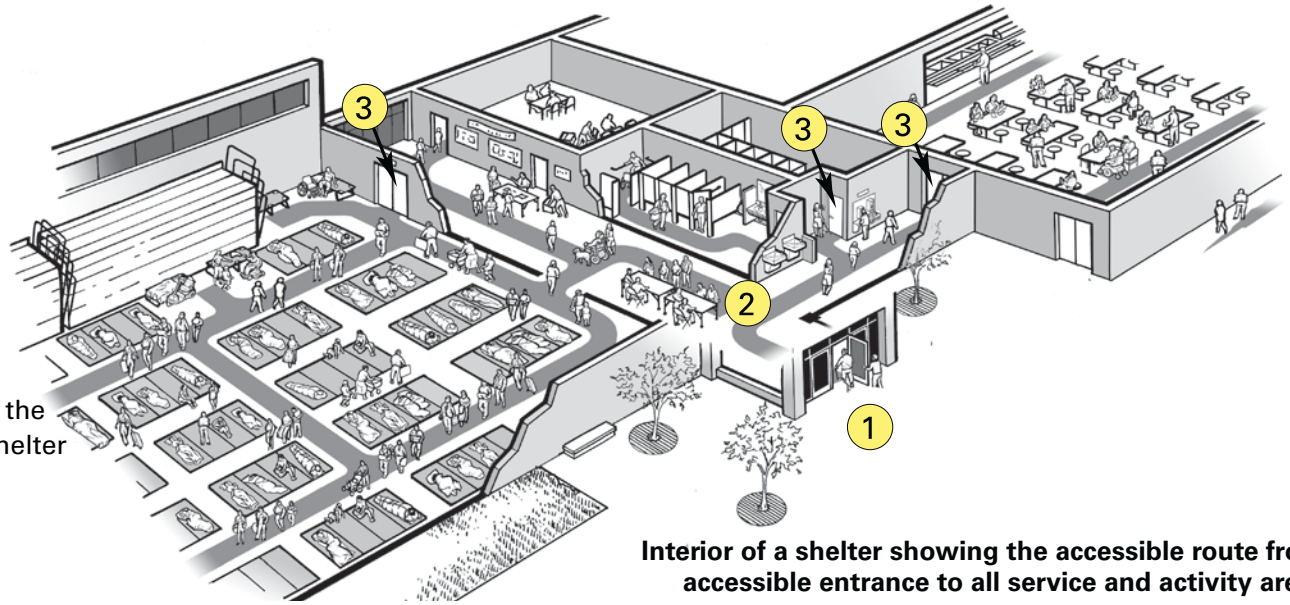

Interior of a shelter showing the accessible route from the accessible entrance to all service and activity areas.

			Notes/Comments
E1-a.	Is there an accessible route, at least 36 inches wide, that connects the accessible entrance to all shelter areas (it may narrow to 32 inches wide for up to 2 feet in length)? [ADA Standards § 4.3.2(3)]	Yes _____ No _____	
E1-b.	Is the accessible route free of steps and abrupt level changes over 1/2 inch? *Note: level changes between 1/4 inch and 1/2 inch should be beveled).* *[ADA Standards §§ 4.1.3(1), 4.3.8]*	Yes _____ No _____	
E1-c.	Does the accessible route from the accessible entrance to all activity areas change levels using a ramp, lift or elevator? [ADA Standards §§ 4.1.3(1), 4.3.8] If No, go to question E1-g.	Yes _____ No _____	
c-i.	If Yes, is a ramp or sloped hallway provided? If Yes, go to question E1-d.	Yes _____ No _____	
c-ii.	Is an elevator or lift provided? If Yes, and the elevator or lift is part of the accessible route to a shelter area, is back-up electrical power available to operate the elevator or lift for the duration of shelter operation should the normal electrical service be disrupted? If Yes and an elevator is provided, see question E1-e. If Yes and a lift is provided, see question E1-f. If No, then either provide back-up electrical power to operate the lift or elevator during the power outage or locate shelter services exclusively on accessible levels that may be reached by people with a mobility disability without using an elevator or lift.	Yes _____ No _____	

			Notes/Comments
E1-d.	Where the slope of the accessible route is greater than 1:20, does this area meet the following requirements for an accessible ramp?	Yes _____ No _____	
d-i.	Is the slope no greater than 1:12? [ADA Standards § 4.8.2] *Note: For existing ramps, the slope may be 1:10 for a 6-inch rise and 1:8 for a 3-inch rise in special circumstances]. [ADA Standards § 4.1.6(3)*	Yes _____ No _____	
d-ii.	Are handrails installed on both sides of each ramp segment? [ADA Standards § 4.8.5]	Yes _____ No _____	
d-iii.	Is the ramp width, measured between handrails, at least 36 inches? [ADA Standards § 4.8.3]	Yes _____ No _____	
d-iv.	Are the handrails mounted 34 to 38 inches above the ramp surface? [ADA Standards § 4.8.5]	Yes _____ No _____	
d-v.	If a ramp is longer than 30 feet, is a level landing at least 60 inches long provided every 30 feet? [ADA Standards § 4.8.4]	Yes _____ No _____	
d-vi.	Does the ramp have a level landing that is at least 60 inches long at the top and bottom of each ramp section or where the ramp changes direction? [ADA Standards § 4.8.4]	Yes _____ No _____	
d-vii.	If the ramp or landing has a vertical drop-off on either side of the ramp, is edge protection provided? [ADA Standards § 4.8.7]	Yes _____ No _____	

E1-e. Is an elevator provided to each of the levels on which each sheltering service or activity area is located? Yes _____ No _____

e-i. Are the centerlines of the call buttons mounted 42 inches above the floor? [ADA Standards § 4.10.3] Yes _____ No _____

e-ii. Does the floor area of the elevator car have space to enter, reach the controls, and exit? [ADA Standards § 4.10.9, Fig. 22] Yes _____ No _____

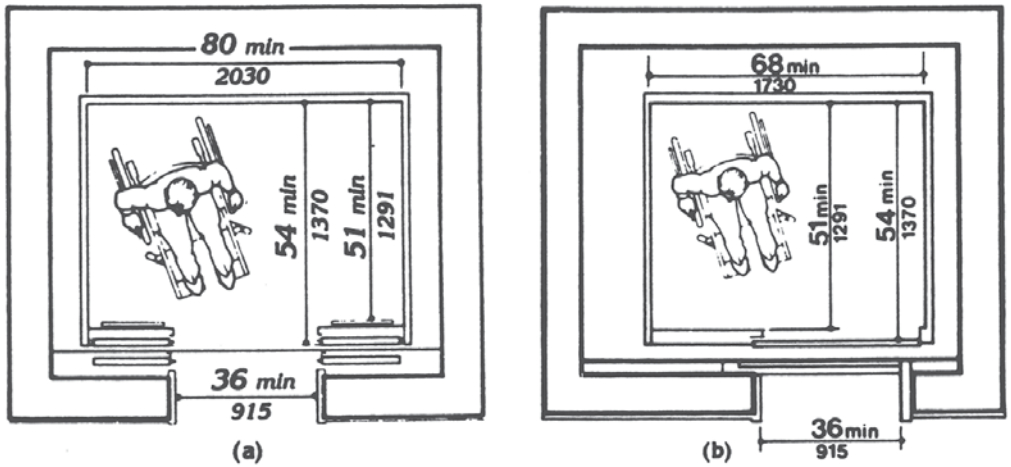

Fig. 22
Minimum Dimensions of Elevator Cars

Note: See Figure 22 for acceptable floor and opening dimensions. Floor dimensions of at least 48 inches by 48 inches may be allowed in existing facilities built before the ADA went into effect.

e-iii. Can the elevator be called and operated automatically without using a special key or having to turn on the elevator from a remote location? [ADA Standards § 4.10.2] Yes _____ No _____

Notes/Comments

			Notes/Comments
e-iv.	Are the highest floor control buttons mounted no more than 54 inches above the floor for a side reach or 48 inches for forward reach? [ADA Standards § 4.10.12 (3)]	Yes _____ No _____	
e-v.	Are raised letters and Braille characters used to identify each floor button and each control? [ADA Standards § 4.10.12]	Yes _____ No _____	
e-vi.	Are signs mounted on both sides of the elevator hoistway door opening (for each elevator and at each floor) that designate the floor with 2-inch minimum-height raised letters and Braille characters centered at 60 inches above the floor? [ADA Standards § 4.10.5]	Yes _____ No _____	
e-vii.	Is the elevator equipped with audible tones or bells or verbal annunciators that announce each floor as it is passed? [ADA Standards § 4.10.13]	Yes _____ No _____	
E1-f.	If a wheelchair lift is provided, does it meet the following?	Yes _____ No _____	
f-i.	Is the lift operational at the time of the survey? [ADA Standards § 4.11.3]	Yes _____ No _____	
f-ii.	Is the change in level from the floor to the lift surface ramped or beveled? [ADA Standards §§ 4.11.2, 4.5.2]	Yes _____ No _____	
f-iii.	Is there at least a 30-inch by 48-inch clear floor space on the wheelchair lift? [ADA Standards §§ 4.11.2, 4.2.4]	Yes _____ No _____	
f-iv.	Does the lift allow a person using a mobility device unassisted entry, operation (is key available, if required), and exit?	Yes _____ No _____	

			Notes/Comments
f-v.	Are the controls and operating mechanisms mounted no more than 54 inches above the floor for a side reach or 48 inches for a forward reach? [ADA Standards §§ 4.11.2, 4.27.3]	Yes _____ No _____	
f-vi.	Are the controls and operating mechanisms usable with one hand without tight grasping, pinching, or twisting? [ADA Standards §§ 4.11.2, 4.27.4]	Yes _____ No _____	
E1-g.	At each location on the way to each shelter activity area where the accessible route passes through a door, does at least one door meet the following requirements?	Yes _____ No _____	
g-i.	Is the clear width for the door opening at least 32 inches measured when the door is open 90 degrees? [ADA Standards §§ 4.1.3(7), 4.13.5]	Yes _____ No _____	
g-ii.	Is the door hardware (e.g., lever, pull, push, panic bar) usable with one hand, without tight grasping, pinching, or twisting of the wrist, to allow people who may not be able to easily use one or both hands to fully operate the hardware? [ADA Standards § 4.13.9]	Yes _____ No _____	

g-iii. Is there clear maneuvering floor space in front of each accessible door (see ADA Standards § Fig. 25) and, on the pull side, is there at least 18 inches clear floor space beyond the latch side of the door (see space configurations in Figure 25)? [ADA Standards § 4.13.6] Yes _____ No _____

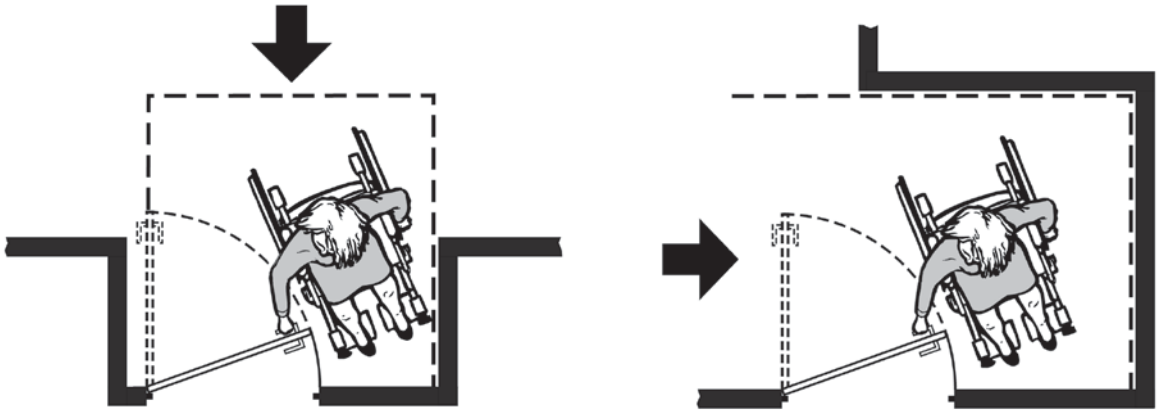

A clear floor space on the latch side of the door (pull side) allows a person using a wheelchair or scooter to pull the door open and then enter. The size of the clear floor space varies depending on the direction of approach (shown by the arrows) and the door swing.

g-iv. Is no more than 5 pounds force needed to push or pull open the door? [ADA Standards § 4.13.11 (2)(b)] Yes _____ No _____

Note: Fire doors are still considered to be accessible if they have the minimum opening force allowable by the appropriate administrative authority.

g-v. If the answers to questions g-ii thru g-iv are No, can the door be propped open? Yes _____ No _____

If an activity area is not on an accessible route and cannot be made accessible, find another area that is on an accessible route where that activity may be provided.

Notes/Comments

2. Typical Issues for People Who are Blind or Have Low Vision

Overhead and wall-mounted objects that may be hazards along a pedestrian route

Individuals who are blind or have low vision may walk along any route or through any shelter activity area, not just the accessible routes. That means any area where people using the shelter can walk, including hallways, corridors, eating areas, and sleeping areas, must be free of objects that cannot be detected by a person who is blind or has low vision. Objects that are wall mounted, that project into a pedestrian route from the side, or that are overhead must be located so that individuals who are blind or have low vision will either detect the objects before they run into them or safely pass under them. These routes must be free of overhanging objects that are less than 80 inches above the floor and side objects that protrude into the route more than 4 inches when the bottom of the object is more than 27 inches above the floor. Items to watch for include wall-mounted fire extinguishers and wall-mounted display cases when the bottom is more than 27 inches above the floor, wall sconces and light fixtures that protrude more than 4 inches off the wall, and open staircases, exit signs, overhead signs, banners, and arched doorways that are lower than 80 inches above the floor.

Notes:

1. Wall-mounted drinking fountains are a hazard when the front projects more than 4 inches beyond the wall and the bottom is more than 27 inches above the floor.
2. Wall-mounted objects cannot project more than 4 inches beyond the wall if the bottom is not in the cane-detectable area below 27 inches off the floor.
3. Overhead objects must be at least 80 inches off the floor.

The following questions apply to pedestrian routes serving or leading to the shelter activity and common use areas.

Notes/Comments

E2-a. Are pedestrian routes leading to or serving each service or activity area of the shelter free of objects that protrude from the side more than 4 inches into the route with the bottom of the object more than 27 inches above the floor? [ADA Standards § 4.4.1] Yes _____ No _____

Note: These objects may be wall mounted or free standing. Items to check include wall-mounted fire extinguishers, light fixtures, coat hooks, shelves, drinking fountains, and display cases.

E2-b. Are pedestrian routes leading to or serving each of the service or activity areas free of overhead objects with the bottom edge lower than 80 inches above the floor? [ADA Standards § 4.4.2] Yes _____ No _____

When the underside of a stair is open, it is a hazard to people who are blind or have low vision. Enclosing the area below the stair or installing a cane-detectable barrier helps the person to avoid the area.

E2-c. Are any interior stairs along these routes configured with a cane-detectable warning or a barrier that prevents travel into the area with less than an 80-inch high head clearance so that people who are blind or who have low vision cannot hit their heads on the underside or stair frame? [ADA Standards § 4.4.2] Yes _____ No _____

If No, list the objects that are a hazard and their location. Remove or relocate the object or place a detectable object on the floor below each object to remove the hazard.

F. Check-In Areas

A shelter usually has one or more check-in areas located near the entrance to the shelter. When check-in areas are provided, then at least one accessible check-in location should be provided. The accessible check-in area should be at the accessible entrance or signs should give directions to the accessible check-in area.

If a permanent reception counter is used for check-in, make sure to provide a writing surface at an accessible height for people who use a wheelchair, scooter, or other mobility device. This may be a part of the reception counter that is no higher than 36 inches above the floor, a folding shelf or an adjacent table, or a clip board.

An accessible check-in location using a folding table with a height that people who use wheelchairs can easily reach.

Notes/Comments

F1. Is there an accessible route that connects the accessible entrance to areas that are likely to be used to register people as they arrive at the shelter? [ADA Standards § 4.3] Yes _____ No _____

F2. If there is a built-in reception or other type of counter, does it have a section that is at least three feet long that is no higher than 36 inches above the floor or is there a nearby surface that is not higher than 36 inches above the floor? [ADA Standards § 7.2] Yes _____ No _____

Living at the Emergency Shelter

G. Sleeping Areas

Each accessible sleeping area needs to be on an accessible route connecting it to other activity areas in the shelter, including toilet rooms and bathing areas. An accessible route with adequate circulation and maneuvering space provides access in the sleeping areas for people who use wheelchairs or scooters and this route serves each accessible bed or cot.

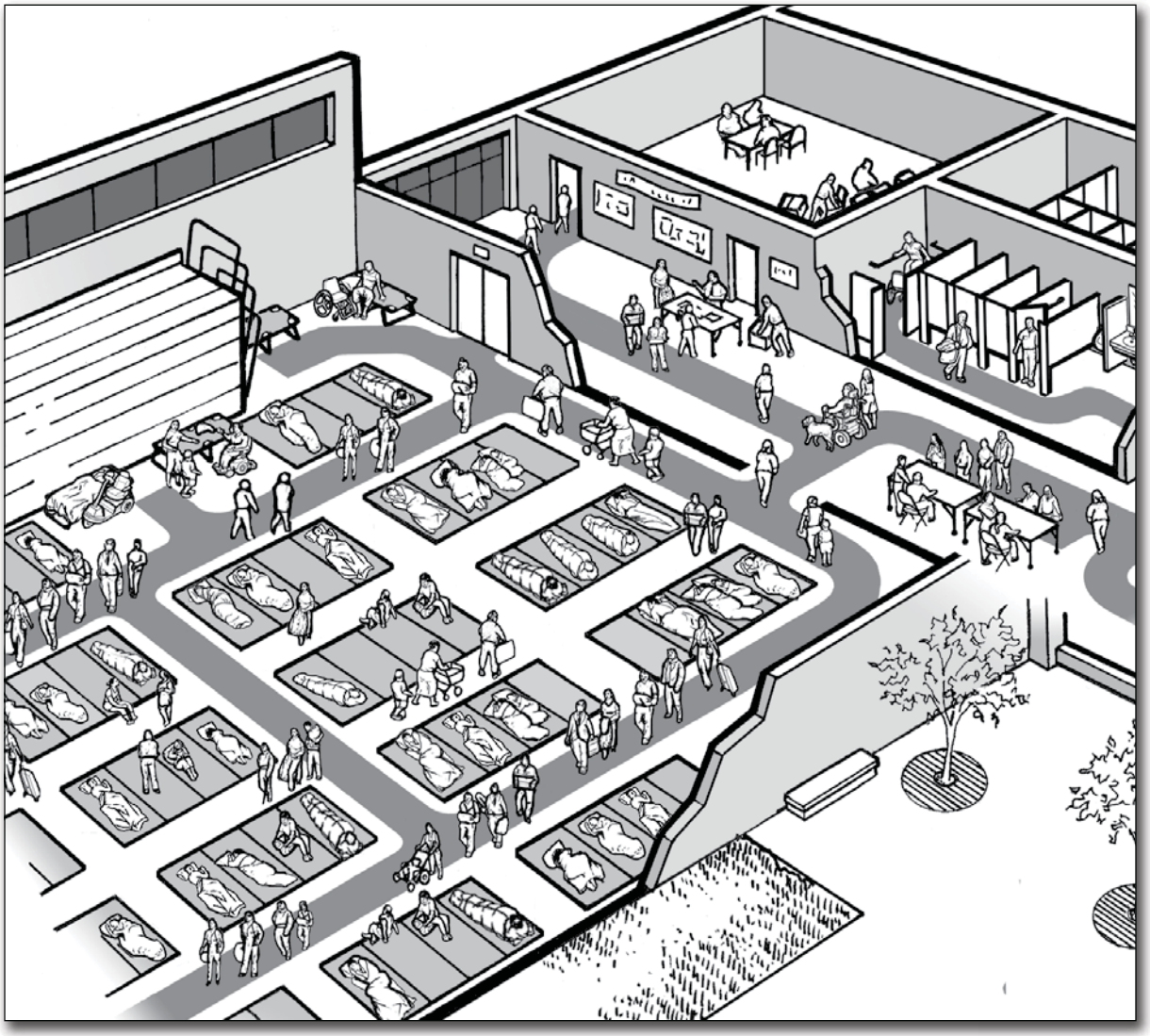

Interior of one section of a shelter's sleeping area. The shaded pathway indicates the accessible route, which provides access to accessible beds, cots, and other activity areas in the space plus the toilet rooms and other activity areas in the shelter.

Accessible cots have a sleeping surface at approximately the same height above the floor as the seat of a wheelchair (17 to 19 inches above the floor). When placed in several sections of the sleeping area, individuals who use a wheelchair, scooter, or other mobility device will be able to sleep near their family or other companions. An accessible route is needed to provide access to each accessible cot and a clear space at least 36 inches wide is needed along the side of the cot to make it possible to transfer between the mobility device and the cot. A preferred location for accessible cots is to have one side against a wall. This helps to stabilize the cot and the wall can act as a backrest when the person sits up on the cot.

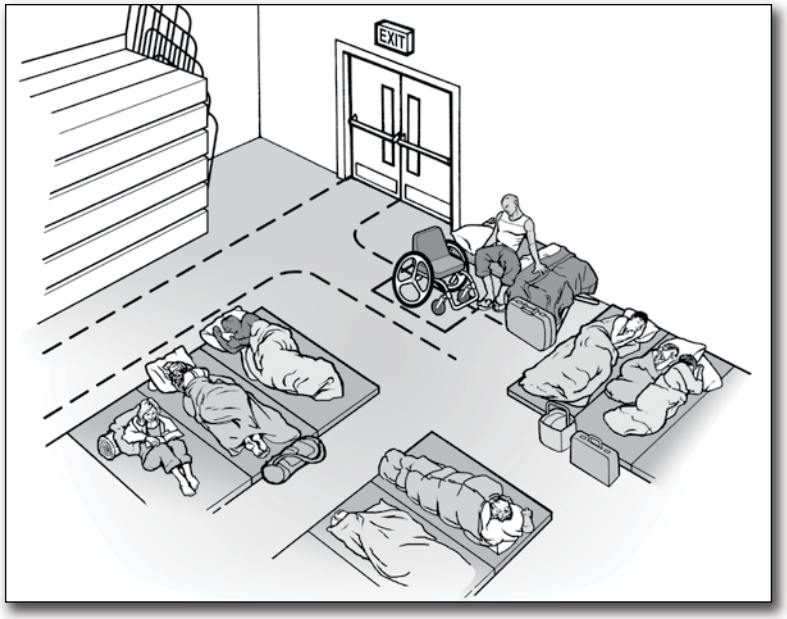

An accessible cot positioned against a wall. Dashed lines indicate the accessible route and clear floor space next to the cot.

Notes/Comments

G1. Is there an accessible route, at least 36 inches wide, that connects each sleeping area with other shelter activity areas? Yes _____ No _____

Note: it may narrow to 32 inches wide for up to 2 feet in length.

[ADA Standards § 4.3.2(3)]

G2. Is the accessible route free of steps and abrupt level changes over 1/2 inch? Yes _____ No _____

Note: level changes between 1/4 inch and 1/2 inch should be beveled.

[ADA Standards §§ 4.1.3(1), 4.3.8]

Note: Although the facility survey cannot check the accessibility of the cots because they will not be installed until the shelter is in use, planning for setting up the sleeping area and for arranging the cots and mats should include providing space for an accessible route and clear floor space at each accessible cot. Cots used by people who are blind or who have low vision should be in an easily locatable area.

H. Restrooms and Showers

Notes/Comments

At least one set of toilet rooms serving the shelter must be accessible to individuals who use a wheelchair, scooter, or other mobility device. In large shelters where more than one set of toilet rooms is needed to serve the occupants, it may be necessary to provide additional accessible toilet facilities or to establish policies to assure that individuals with disabilities have access to the accessible facilities.

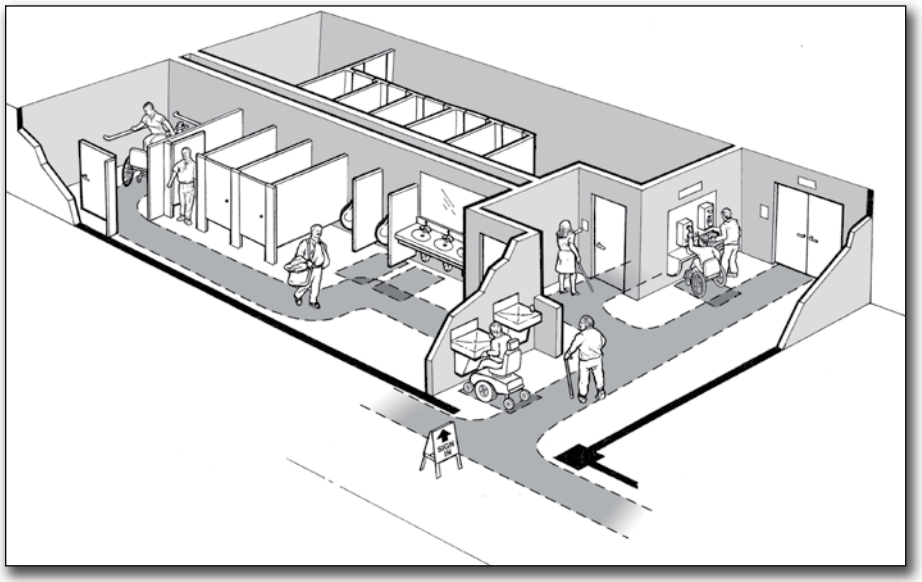

Interior of an accessible toilet room showing accessible route, clear floor space at accessible fixtures, and the wide accessible toilet stall.

H1. If a sign is provided at the toilet room entrance (e.g. Men, Women, Boys, Girls, etc.), is a sign with raised characters and Braille mounted on the wall adjacent to the latch? [ADA Standards § 4.30.6] Yes _____ No _____

If No, install a sign with raised characters and Braille on the wall adjacent to the latch side of the door and centered 60 inches above the floor and leave the existing sign in place on the door if removing it will damage the door.

Note: an additional sign may be mounted on the toilet room door but this cannot be considered to be the accessible sign which must be mounted on the wall adjacent to the latch side of the door.

			Notes/Comments
H2.	Does the door to the toilet room provide at least 32 inches clear passage width when the door is open 90 degrees? [ADA Standards § 4.13.5]	Yes _____ No _____	
H3.	Is the hardware (e.g., lever, pull, panic bar) usable with one hand without tight grasping, pinching, or twisting of the wrist? [ADA Standards § 4.13.9] If No, can the door be propped open without compromising privacy, or can the hardware be modified by adding new accessible hardware, or adapting or replacing hardware?	Yes _____ No _____	
H4.	On the pull side of the door, is there at least 18 inches clearance provided on the latch side if the door is not automatic or power-operated? [ADA Standards § 4.13.6, Fig. 25]	Yes _____ No _____	
H5.	If there is a raised threshold, is it no higher than 3/4 inch at the door and beveled on both sides? [ADA Standards §§ 4.1.6(3)(d)(ii), 4.13.8] If No, replace threshold with one with beveled sides or add a sloped insert.	Yes __ No___ NA__	
H6.	If the entry has a vestibule, is there a 30-inch by 48-inch clear floor space inside the vestibule where a wheelchair or scooter user can be outside the door swing? [ADA Standards § 4.13.7] If No, possible solutions include leaving the inner door open or removing the outer door.	Yes _____ No _____	

H7. Inside the toilet room, is there an area where a person who uses a wheelchair or other mobility device can turn around - either at least a 60-inch diameter circle or a "T"-shaped turn area as shown in the figures below? [ADA Standards §§ 4.22.3; 4.2.3] Yes _____ No _____

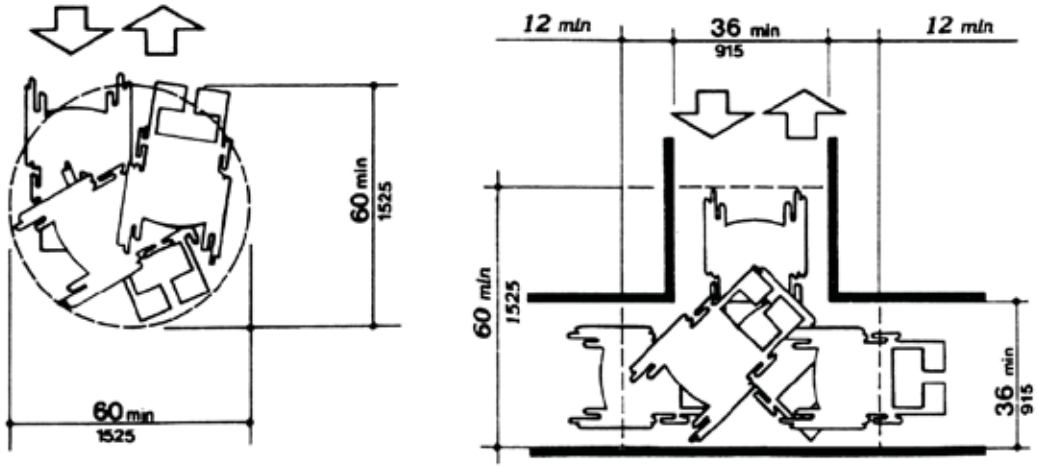

Minimum spaces for turning

H8. If lavatories are provided, does at least one have at least a 29 inch high clearance under the front apron with the top of the rim no more than 34 inches above the floor? [ADA Standards § 4.19.2] Yes _____ No _____

H9. Are the drain and hot water pipes for this lavatory insulated or otherwise configured to protect against contact? [ADA Standards § 4.19.4] Yes _____ No _____

Notes/Comments

			Notes/Comments
H10.	Does this lavatory have controls that operate easily with one hand, without tight grasping, pinching, or twisting of the wrist? [ADA Standards § 4.19.5]	Yes _____ No _____	
H11.	If mirrors are provided, is the bottom of the reflecting surface for the mirror at this lavatory no higher than 40 inches above the floor or is a full length mirror provided? [ADA Standards § 4.19.6]	Yes _____ No _____	
H12.	For at least one of each type of dispenser, receptacle, or equipment, is there clear floor space at least 30 inches wide x 48 inches long adjacent to the control or dispenser (positioned either parallel to the control or dispenser or in front of it)? [ADA Standards §§ 4.23.7; 4.27.2; 4.2.5 and Fig 5; 4.2.6 and Fig 6]	Yes _____ No _____	
H13.	Is the operating control (switch, lever, button, or pull) of at least one of each type of dispenser or built-in equipment no higher than 54 inches above the floor (if there is clear floor space for a parallel approach) or 48 inches (if there is clear floor space for a front approach)? [ADA Standards §§ 4.23.7; 4.27.3; 4.2.5 and Fig 5; 4.2.6 and Fig 6]	Yes _____ No _____	
H14.	Are all built-in dispensers, receptacles, or equipment mounted so the front does not extend more than 4 inches from the wall if the bottom edge is between 27 inches and 80 inches above the floor? [ADA Standards §§ 4.23.7; 4.27; 4.4.1; Fig. 8]	Yes _____ No _____	

Notes/Comments

Toilet Stalls

H15. Is at least one wide toilet stall provided with an outswinging door, side and rear grab bars, and clear space next to the toilet? [ADA Standards § 4.17] Yes _____ No _____

If No, check to see if another toilet room provides a wide accessible toilet stall, note its location for shelter planners, and answer all toilet room questions with respect to that toilet room.

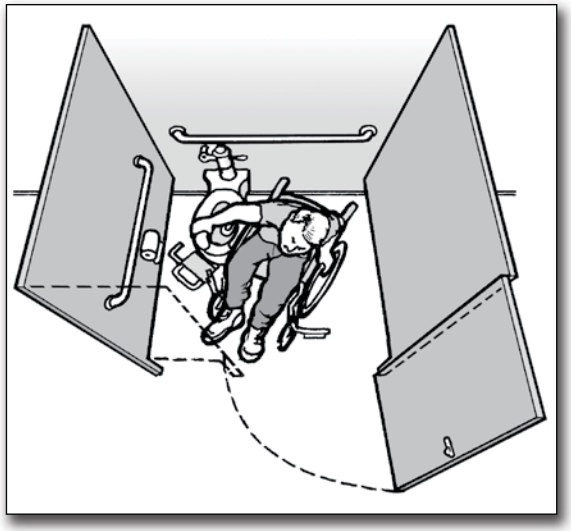

Overhead view of an individual using a wheelchair positioned beside a toilet in a wide accessible stall.

H16. Is the toilet stall at least 60 inches wide and 56 inches deep (wall mounted toilet) or 59 inches deep (floor mounted toilet)? [ADA Standards § 4.17.3] Yes _____ No _____

If No, note the width and depth of the stall. _____

H17. Is at least 9 inches of toe clearance provided under the front wall and at least one side wall of the toilet stall? [ADA Standards § 4.17.4] Yes _____ No _____

H18. Is the centerline of the toilet 18 inches from the adjacent side wall? [ADA Standards § 4.16.2; 4.17.3] Yes _____ No _____

H19. Is the top of the toilet seat 17 inches to 19 inches above the floor? [ADA Standards § 4.16.3] Yes _____ No _____

H20. Is the flush valve located on the wide side adjacent to the lavatory or is an automatic flush valve provided? [ADA Standards § 4.16.5] Yes _____ No _____

H21. Is a horizontal grab bar at least 40 inches long securely mounted on the adjacent side wall 33 to 36 inches above the floor with one end no more than 12 inches from the back wall 33 to 36 inches above the floor? [ADA Standards § 4.16.4; 4.17.6] Yes _____ No _____

H22. Is a second horizontal grab bar at least 36 inches long securely mounted on the back wall with one end no more than 6 inches from the side wall 33 to 36 inches above the floor? [ADA Standards § 4.16.4; 4.17.6] Yes _____ No _____

H23. Is the door to the toilet stall located diagonally opposite, not directly in front of, the toilet or on the opposite side wall from the wall with the long grab bar? [ADA Standards § 4.17.3] Yes _____ No _____

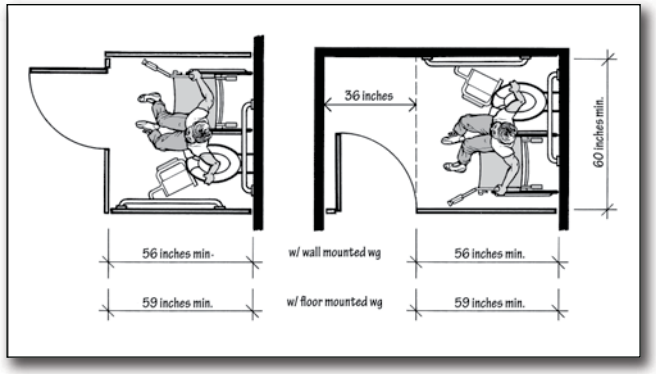

Plan views showing minimum sizes of wide accessible toilet stall

H24. Unless the wide stall is located at the end of a row of toilet stalls, does the door to this wider stall open out? [ADA Standards § 4.17.3] Yes _____ No _____

Notes/Comments

			Notes/Comments
H25.	Is the clear width of the door at least 32 inches (measured between the face of the door and the edge of the opening) when the door is open 90 degrees? [ADA Standards § 4.13.5]	Yes _____ No _____	
H26.	If there are 6 or more stalls in the restroom, is one of those stalls (in addition to the wider stall noted above) exactly 36 inches wide with an outswinging stall door that provides at least 32 inches of clear width? [ADA Standards § 4.22.4]	Yes _____ No _____	
H27.	Does this 36-inch wide stall have horizontal grab bars on both of the side partitions that are at least 36 inches long and 33 to 36 inches above the floor? [ADA Standards § 4.22.4]	Yes _____ No _____	
H28.	Is the surface of the toilet seat in this 36-inch-wide stall 17 to 19 inches above the floor? [ADA Standards §§ 4.16.3; 4.22.4]	Yes _____ No _____	
H29.	If a coat hook is provided is it mounted no higher than 54 inches above the floor for a side approach or 48 inches above the floor for a front approach? [ADA Standards § 4.25.3]	Yes _____ No _____	

Note:
For many emergency shelters, evacuees are not expected to use shower or bathing facilities due to the short period they may stay at the shelter. If planning for the shelter operation includes offering shower or bathing facilities, then those facilities should be on an accessible route and checked for accessibility. For information on the requirements for accessible showers or bathtubs see the ADA Standards for Accessible Design which is available online at www.ada.gov.

The following are figures illustrating some accessible shower features from the ADA Standards.

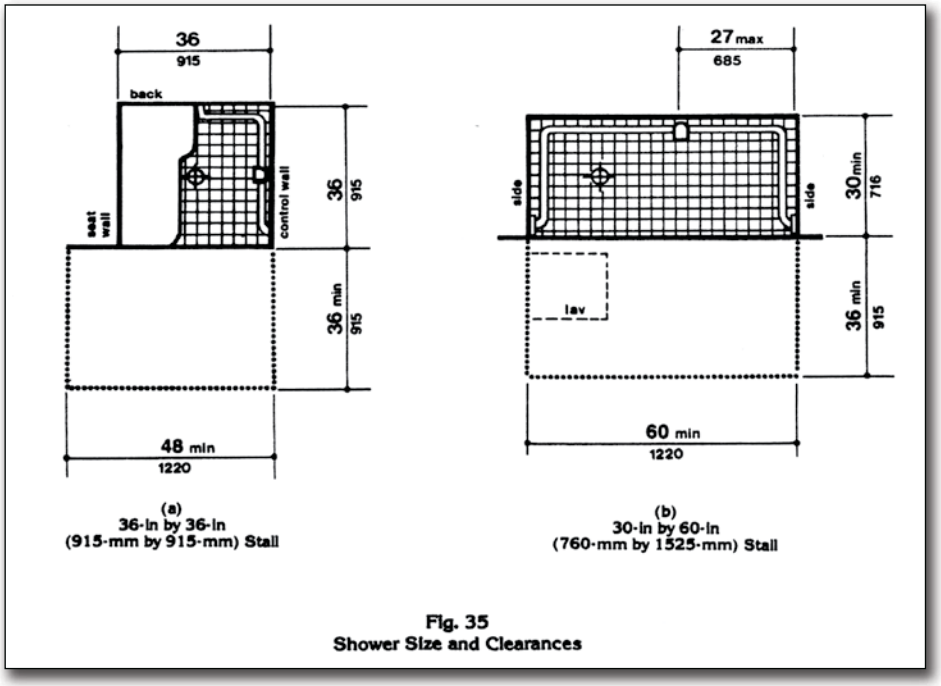

Accessible Shower Stall Minimum Size and Clearances

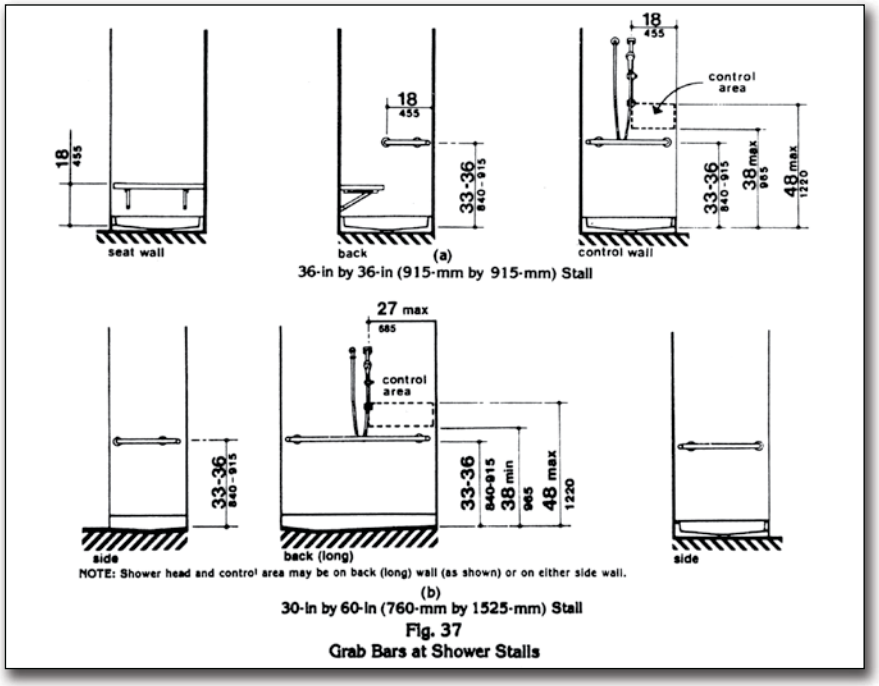

Accessible Shower Stall Grab Bars and Seat, Shower, and Control Area

I. Public Telephones

Notes/Comments

When public telephones are provided, then one or more accessible public telephones should be provided in areas serving shelter activity and service areas. Whenever accessible telephones are provided, each should be on an accessible route. In shelters it is common to provide additional telephones on tables or desks and some of these telephones should be accessible.

A text telephone (also commonly known as a TTY) is a device that allows individuals who are deaf or hard of hearing or who have a speech disability to communicate over a telephone. Having at least one TTY in any building that has at least four pay phones, provides access for people who are deaf or hard of hearing.

I1. If at least one public telephone or one bank of telephones is provided, does at least one of each type of telephone (e.g., pay telephone, intercom telephone, other telephone) have the following? Yes _____ No _____

I1a. For a side approach (clear floor space at least 30 inches long x 48 inches wide), is the coin slot no higher than 54 inches above the floor? [ADA Standards § 4.31.2, Fig. 44 (a)] Yes _____ No _____

I1b. For a front approach (where clear floor space at least 30 inches wide x 48 inches long), is the coin slot no higher than 48 inches above the floor? [ADA Standards § 4.31.2, Fig. 44 (b)] Yes _____ No _____

I2. Does the phone have volume controls? [ADA Standards § 4.31.5] Yes _____ No _____

			Notes/Comments
I3.	If three or more telephones are located in one bank serving the shelter, are a shelf and an electrical outlet provided at one telephone for use of a portable TTY? [ADA Standards § 4.31.9 (2)]	Yes _____ No _____	
I4.	If four or more pay telephones are provided on the site, is there a TTY (text telephone) provided at the shelter?	Yes ____ No _____ If yes, location: _____	
I5.	Is there a sign at each pay phone or pay phone bank for the shelter directing people to the nearest TTY? [ADA Standards § 4.30.7 (3); 4.31.9(3)]	Yes _____ No _____	

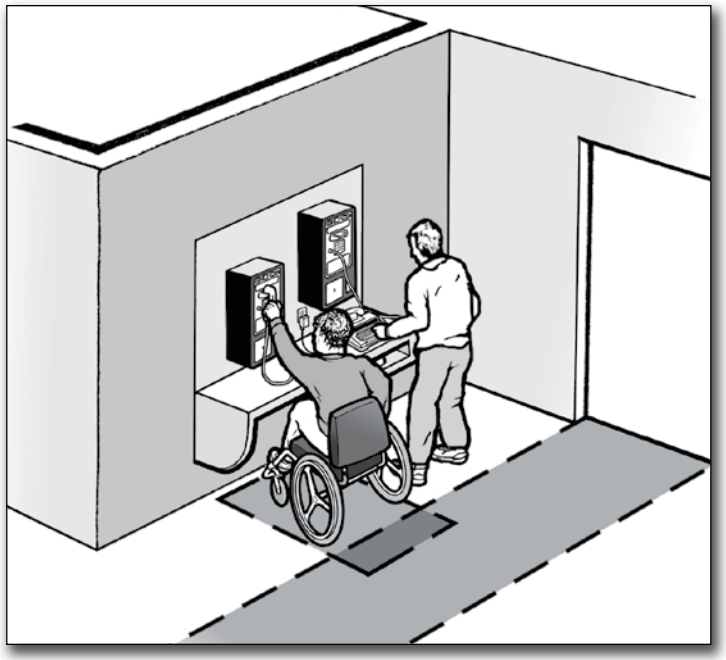

A bank of two public telephones. The accessible telephone is on the left and the telephone on the right is equipped with a TTY.

J. Drinking Fountains

Notes/Comments

Approximately 50% of the drinking fountains serving the shelter must be accessible and located on an accessible route. Accessible drinking fountains must have enough space for a person using a wheelchair, scooter, or other mobility device to use the drinking fountain. The spout and controls of the drinking fountain must be near the front edge. The controls must be usable with one hand without tight grasping, pinching, or twisting of the wrist. The other 50% of drinking fountains serving the shelter must be configured for use by people who have difficulty bending or stooping while standing.

When an object, such as a drinking fountain, protrudes more than four inches into the circulation path, the bottom edge must be at 27 inches above the floor or lower so the drinking fountain is not a hazard to people who are blind or have low vision.

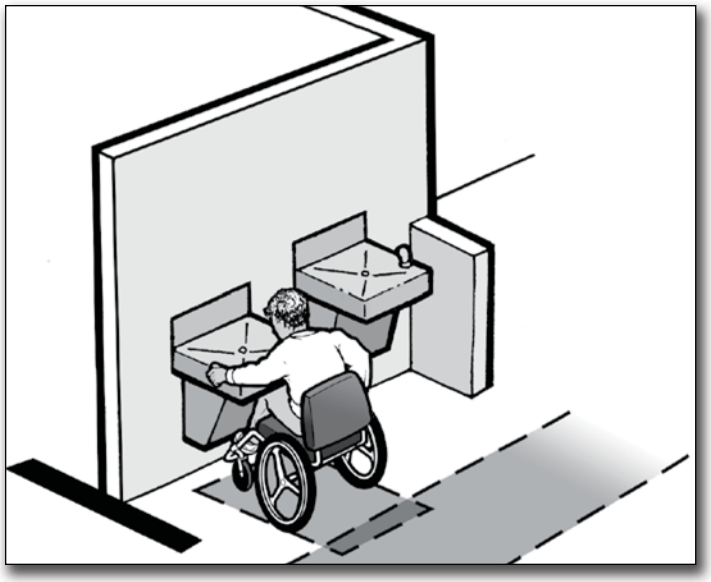

A person who uses a wheelchair is drinking from an accessible drinking fountain. Beside the accessible drinking fountain is a standard height fountain that is usable by people who have difficulty bending or stooping. The short wall beside the standard height drinking fountain is cane detectable to guide people who are blind or have low vision away from the standard height fountain which, otherwise, would be a protruding object hazard.

The following questions apply to 50% of the drinking fountains that are provided.

Notes/Comments

J1. If the drinking fountain is a wall-mounted unit, is there clear floor space at least 30 inches wide (36 inches if it is in an alcove) x 48 inches long in front of the drinking fountain and at least 27 inches high under the fountain so that a person using a wheelchair can get close to the spout and controls? [ADA Standards § 4.15.5 (1), Figs. 4 (e) and 27 (b)] Yes _____ No _____

J2. If the drinking fountain is a floor-mounted unit, is there clear floor space at least 30 inches long x 48 inches wide (60 inches if it is in an alcove) for a side approach to the drinking fountain so that a person using a wheelchair can get close to the spout and controls even though the fountain has no clear space under it? [ADA Standards § 4.15.5 (2), Figs. 4 (e), 27 (c) and (d)] Yes _____ No _____

J3. Is the top of the spout no higher than 36 inches above the floor and at the front of the fountain or water cooler? [ADA Standards § 4.15.2] Yes _____ No _____

J4. Does the water rise at least 4 inches high when no more than 5 pounds of force is applied to the controls of the fountain? [ADA Standards §§ 4.15.3 and 4.15.4] Yes _____ No _____

J5. Are the controls on or near the front of the unit and do they operate with one hand without tight grasping, pinching, or twisting of the wrist? [ADA Standards § 4.15.4] Yes _____ No _____

J6. Is the bottom of the apron of the fountain 27 inches above the floor so that it provides the space needed for a person who uses a wheelchair to pull up under it but is not a hazard to people who are blind or have low vision and use a cane to detect hazards? [ADA Standards §§ 4.15.5 (1) and 4.4.1] Yes _____ No _____

K. Eating Areas

Notes/Comments

An accessible route, at least 36 inches wide and without steps or steep slopes, must be provided to and throughout the food service and eating areas of the shelter. The accessible route allows people who use wheelchairs, scooters, and other mobility devices to get to all of the food and drink items in the shelter and to accessible tables and seating.

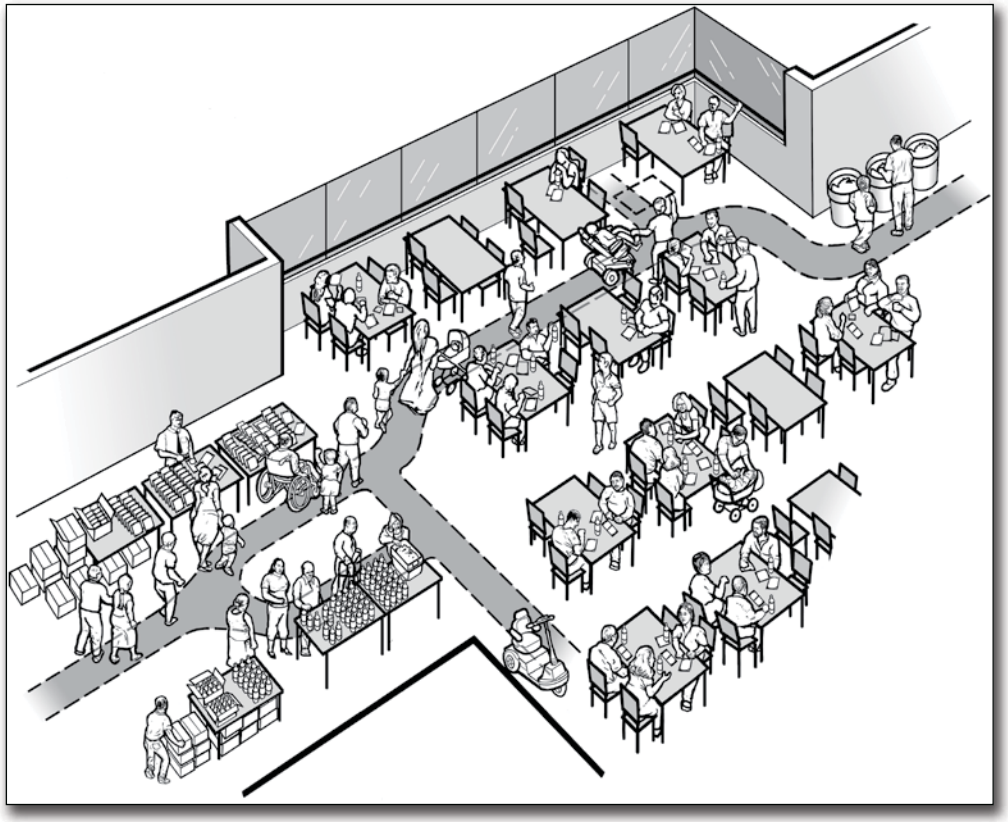

A serving and eating area in a shelter are shown above. The shaded pathway illustrates the accessible route connecting the entrance, serving areas, accessible seats and tables, and the exit.

			Notes/Comments
K1.	Is there an accessible route, at least 36 inches wide, that connects each of the shelter activity areas with the food service and eating areas (it may narrow to 32 inches wide for up to 2 feet in length)? [ADA Standards § 4.3.2(3)]	Yes _____ No _____	
K2.	Is there an accessible route that is at least 36 inches wide that connects accessible tables with serving, condiment, and dispenser areas? [ADA Standards § 5.3; 4.3.8]	Yes _____ No _____	
K3.	In each eating area, if tables with fixed seats are provided, do at least 5% of each type of table with fixed seats have accessible locations with knee space at least 27 inches high, at least 19 inches deep, and at least 30 inches wide with a table top 28 to 34 inches above the floor? [ADA Standards § 5.1] *Note: If movable tables and chairs are used as shown, then locate at least 5% of the tables adjacent to an accessible route. Tables can be relocated as needed during operation of the shelter.*	Yes _____ No _____	
K4.	If built-in food, drink, condiment, and tableware dispensers are provided, are dispensers and operating controls mounted no higher than 54 inches above the floor if clear floor space is provided for a side approach? [ADA Standards § 5.5]	Yes _____ No _____	
K5.	If the operating controls are set back 10 to 24 inches from the front edge of the counter or table are they no higher than 46 inches above the floor? [ADA Standards § 5.5]	Yes _____ No _____	
K6.	If food service lines are provided, is an accessible route provided (at least 36 inches wide) and are the tray slides no higher than 34 inches above the floor? [ADA Standards § 5.5]	Yes _____ No _____	

OTHER ISSUES

L. Availability of Electrical Power

Emergency shelters should have a way to provide a back-up power supply when the electrical service is interrupted. The back-up power is needed to provide refrigeration of medicines, operation of supplemental oxygen and breathing devices, and for charging the batteries of power wheelchairs and scooters. Individuals whose medications (certain types of insulin, for example) require constant refrigeration need to know if a shelter provides supplemental power for refrigerators or ice-packed coolers. Individuals who use medical support systems, such as supplemental oxygen, or who require periodic breathing treatments using powered devices rely on a stable source of electricity. These individuals must have access to electric power from a generator or other source of electricity while at a shelter.

In general, in each community or area where a shelter is provided, a facility must have one or more back-up generators or other sources of electricity so that evacuees with a disability who rely on powered devices can have access to electrical power while at the shelter.

L1. Is there a backup source of electrical power for the facility? Yes _____ No _____

L2. Is there a refrigerator or other equipment, such as coolers with a good supply of ice, at the shelter? Yes _____ No _____

Notes/Comments

M. Single-User or "Family" Toilet Room

Notes/Comments

In many schools and large facilities where emergency shelters are often located, single-user toilet rooms may be provided for staff. In those facilities built or altered since the ADA went into effect, single-user toilet rooms should have accessible features that could be useful during shelter operation. These features include an accessible entrance and turning and maneuvering spaces. These rooms should also have been built to allow grab bars, accessible controls, and accessible hardware to be easily installed.

As part of the planning for operating an emergency shelter, facilities operators should consider using an available staff toilet room, if provided, as a single-user or "family" toilet room. When provided in addition to large accessible toilet rooms, this type of facility permits a person with a disability to receive assistance from a person of the opposite sex.

M1. If a sign is provided at the toilet room entrance (e.g. Men, Women, Boys, Girls, etc.), is a sign with raised characters and Braille mounted on the wall adjacent to the latch side of the door and centered 60 inches above the floor? [ADA Standards § 4.1.3(16)(a)] Yes _____ No _____

If No, install a sign with raised characters and Braille on the wall adjacent to the latch side of the door and centered 60 inches above the floor and leave the existing sign in place on the door if removing it will damage the door.

Note: an additional sign may be mounted on the toilet room door but this cannot be considered to be the accessible sign which must be mounted on the wall adjacent to the latch side of the door.

M2. Does the door to the toilet room provide at least 32 inches clear passage width when the door is open 90 degrees? [ADA Standards § 4.13.5] Yes _____ No _____

M3. Is the hardware (e.g., lever, pull, etc.) usable with one hand without tight grasping, pinching, or twisting of the wrist? [ADA Standards § 4.13.9] Yes _____ No _____

If No, add new accessible hardware or adapt/replace hardware.

M4. On the latch, pull side of the door, is there at least 18 inches clearance provided if the door is not automatic or power operated? [ADA Standards § 4.13.6; Fig. 25] Yes _____ No _____

M5. If there is a raised threshold, is it no higher than 3/4 inch at the door and beveled on both sides? [ADA Standards §§ 4.1.6(3)(d)(ii); 4.13.8] Yes _____ No _____

If No, replace threshold with one with beveled sides or add a sloped insert.

M6. Inside the room is there an area for a person who uses a wheelchair to turn around - either a 60-inch diameter circle or a "T"-shaped turn area? [ADA Standards §§ 4.22.3; 4.2.3] Yes _____ No _____

M7. If the door swings into the room, does the door swing not overlap the required clear floor space for the toilet or lavatory? [ADA Standards §§ 4.22.2; 4.2.4.1] Yes _____ No _____

Note: In the figure below the clear floor space for the toilet extends at least 66 inches from the back wall.

M8. Is there at least 18 inches between the center of the toilet and the side of the adjacent lavatory? [ADA Standards § 4.16.2; Fig. 28] Yes _____ No _____

M9. Does the lavatory have at least a 29-inch-high clearance under the front edge and the top of the rim no more than 34 inches above the floor? [ADA Standards § 4.19.2] Yes _____ No _____

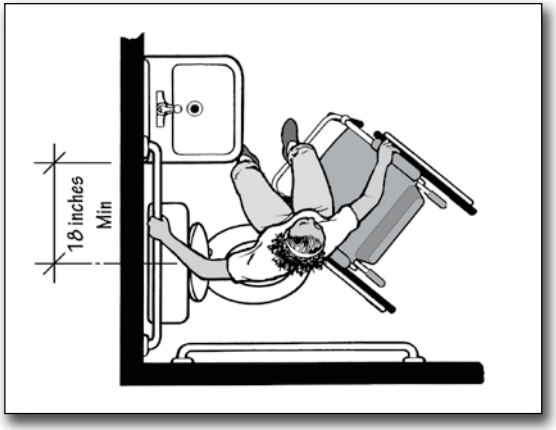

Plan view showing the minimum amount of space required between the toilet and the adjacent lavatory.

Notes/Comments

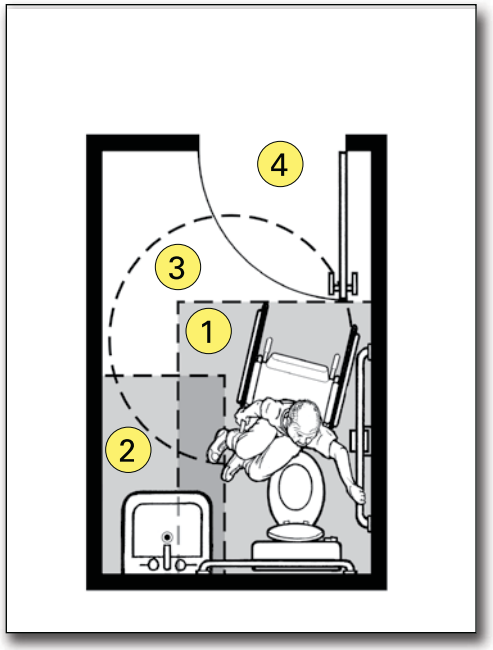

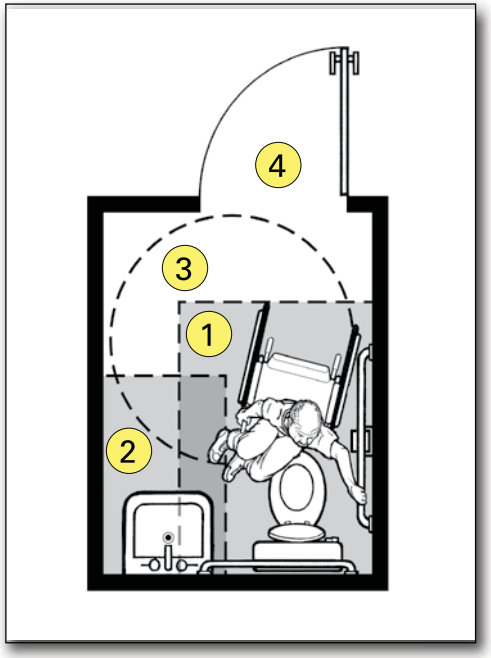

Notes:

1. 48-inch minimum by 66-inch minimum clear floor space for toilet
2. 48-inch minimum by 30-inch minimum clear floor space for lavatory
3. 60-inch minimum turning space
4. door swing

Plan view of a single-user toilet room showing the door swing not overlapping the dark toned area indicating the clear floor space for the toilet and lavatory. The door swing may overlap the turning space indicated by the circular area.

Notes/Comments

M10. Are the drain and hot water pipes for the lavatory insulated or otherwise configured to protect against contact? Yes _____ No _____
[ADA Standards § 4.19.4]

M11. Does that lavatory have controls that operate easily with one hand, without tight grasping, pinching, or twisting of the wrist? Yes _____ No _____
[ADA Standards § 4.19.5]

M12. If a mirror is provided, is the bottom of the reflecting surface no higher than 40 inches above the floor or is a full length mirror provided?
[ADA Standards § 4.19.6]

Yes _____ No _____

M13. For each type of dispenser, receptacle, or equipment, is there clear floor space at least 30 inches wide x 48 inches long adjacent to the control or dispenser (positioned either parallel to the control or dispenser or in front of it)?
[ADA Standards §§ 4.23.7; 4.27.2; 4.2.5 and Fig 5; 4.2.6 and Fig 6]

Yes _____ No _____

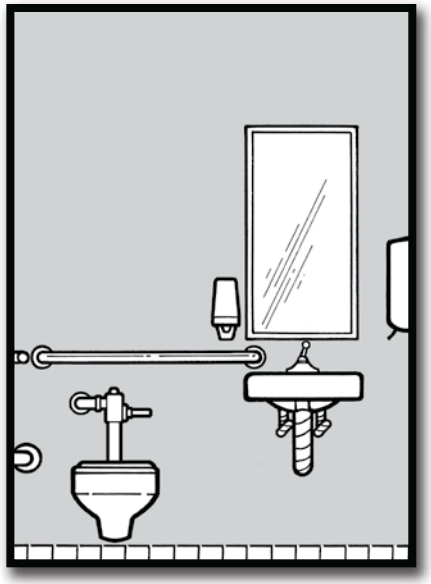

Front view of toilet, lavatory, mirror and soap dispenser

M14. Is the operating control (switch, lever, button, or pull) for each type of dispenser or built-in equipment no higher than 54 inches above the floor (if there is clear floor space for a parallel approach) or 48 inches (if there is clear floor space for a front approach)?
[ADA Standards § 4.23.7; 4.27.3; 4.27.2; 4.2.5 and Fig 5; 4.2.6 and Fig 6]

Yes _____ No _____

M15. Are all built-in dispensers, receptacles, or equipment mounted so the front does not extend more than 4 inches from the wall if the bottom edge is between 27 inches and 80 inches above the floor?
[ADA Standards §§ 4.23.7; 4.27; 4.4.1; Fig. 8]

Yes _____ No _____

M16. Is the centerline of the toilet 18 inches from the adjacent side wall?
[ADA Standards § 4.16.2; 4.17.3]

Yes _____ No _____

Notes/Comments

		Notes/Comments
M17. Is the top of the toilet seat 17 to 19 inches above the floor? [ADA Standards § 4.16.3]	Yes _____ No _____	
M18. Is the flush valve located on the side adjacent to the lavatory? [ADA Standards § 4.16.5]	Yes _____ No _____	
M19. Is a horizontal grab bar at least 40 inches long securely mounted on the adjacent side wall 33 to 36 inches above the floor with one end no more than 12 inches from the back wall? [ADA Standards §§ 4.16.4; 4.17.6]	Yes _____ No _____	
M20. Is there a horizontal grab bar at least 36 inches long securely mounted behind the toilet 33 to 36 inches above the floor with one end no more than 6 inches from the side wall? [ADA Standards §§ 4.16.4; 4.17.6]	Yes _____ No _____	
M21. If a coat hook is provided, is it mounted no higher than 54 inches above the floor for a side approach or 48 inches above the floor for a front approach? [ADA Standards § 4.25.3]	Yes _____ No _____	

N. Health Units/Medical Care Areas

Notes/Comments

In many schools, where emergency shelters are often located, nurses' rooms or other types of health care facilities may be provided. These health care facilities should be on an accessible route and have accessible features, including an accessible entrance, an accessible route to the different types of services offered within the medical care unit, turning and maneuvering spaces, and cots or beds that are at a height to which people who use mobility devices can easily transfer.

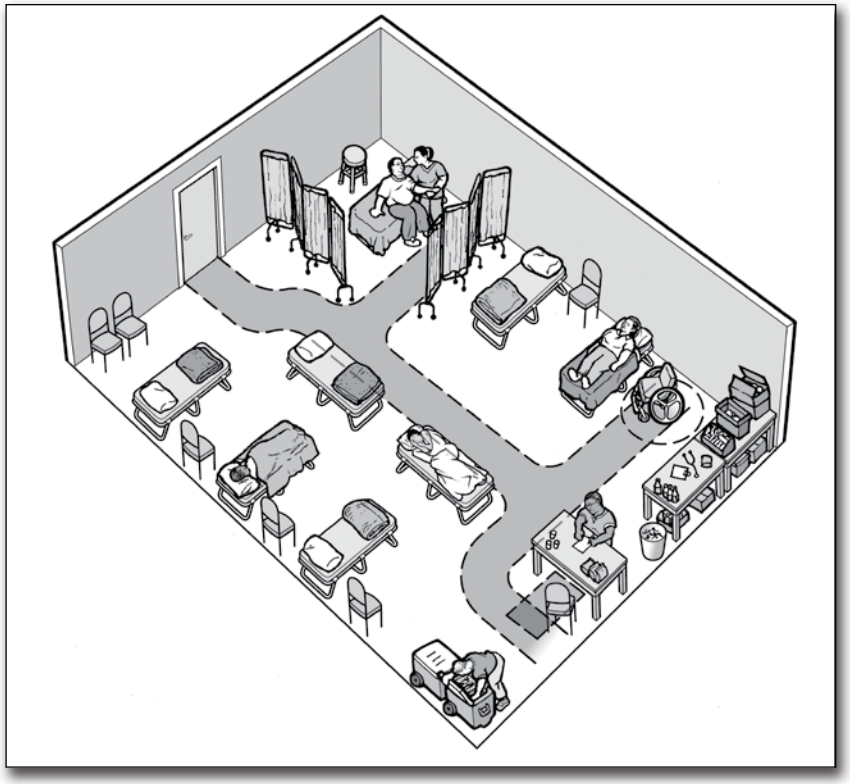

An overhead view of a medical care area with a shaded pathway showing the accessible route shown and clear floor spaces.

N1. Is there an accessible route, at least 36 inches wide, that connects each of the shelter activity areas with the health units and medical care areas (it may narrow to 32 inches wide for up to 2 feet in length)? [ADA Standards § 4.3.2(3)] Yes _____ No _____

O. Accessible Portable Toilets

Portable toilets are often used at emergency shelters to supplement permanent toilet facilities. When portable toilets are provided, at least one must be a unit with accessible features that is located on an accessible route connecting it with the shelter. For the entrance to an accessible portable toilet to be usable, there must either be no step or a ramp must be installed that extends extends from the hinge side of the door to at least 18 inches beyond the latch side of the door.

Accessible portable toilets should similar features to a standard accessible toilet stall including an accessible door, side and rear grab bar, clear space next to the toilet, and maneuvering space.

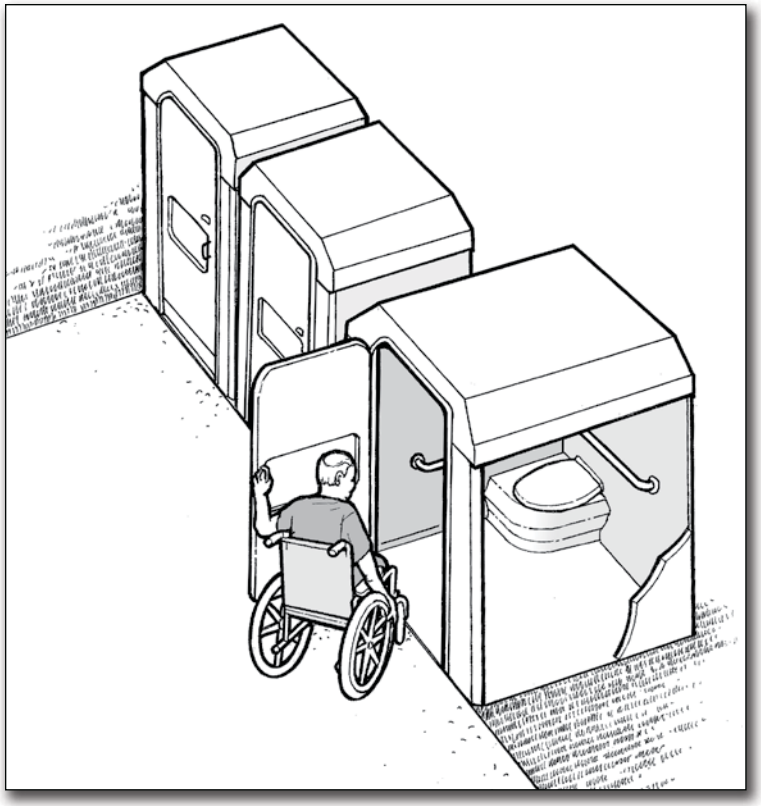

A person using a wheelchair enters an accessible portable toilet. The unit is positioned to provide a flush entry from the accessible route.

Attachment G: Modifications to Newly Constructed Facilities

Please Note: Paragraph 47 of the Consent Decree requires that within nine months of the entry of this Consent Decree, the County will provide signage as necessary to comply with 28 C.F.R. § 35.163(b), after having surveyed all facilities that are the subject of this Consent Decree for the purpose of identifying those that have multiple entrances not all of which are accessible.

The term "Standards" refers to the 2010 ADA Standards for Accessible Design (28 C.F.R. § 35.104 (Title II) (defining the "2010 ADA Standards" as the requirements set forth in appendices B and D to 36 C.F.R. part 1191 and the requirements contained in 28 C.F.R. § 35.151.)). All citations are to the Standards, unless otherwise noted. In general, when determining the number of accessible elements required (*i.e.*, assistive listening system receivers, wheelchair seating spaces, accessible parking spaces, play components, etc.), always round UP to the nearest whole number.

In order that the following spaces and elements in County facilities, for which construction was commenced after January 26, 1992, are readily accessible to and usable by persons with disabilities, the County will take the following actions:

1. Within 9 months of the effective date of this Consent Decree, the County will complete the following modifications to the **Humboldt County Correctional Facility**, located at 901 5th Street in Eureka.

    a. The County will make the following modifications to the ramp to the entrance of the County Correctional Facility.

        i. The ramp cross slope at the 1st landing is 3.8% and the cross slope at the 2nd landing is 2.6%. Provide landings at the top and bottom of each ramp run such that the landings have slopes of no more than 2.08% in any direction and contain no changes in level; the landings are at least as wide as the ramp and 60 inches long at the top and bottom of every ramp run; and any landings provided where the ramp changes direction are at least 60 inches by 60 inches. On each side of the ramp, provide edge protection that consists of either an extended ground surface at least 12 inches beyond the edge of the surface of the landing, or a curb or barrier that prevents the passage of a 4 inch diameter sphere where any part of the sphere is within 4 inches of the surface. If the ramp is subject to wet conditions, landings shall be designed to prevent the accumulation of water. Standards §§ 206.2, 405.7.

    b. Elevator

        i. Car #2 from Visiting Area - The elevator doors do not automatically re-open when obstructed. Provide horizontal sliding doors that open and close automatically with a reopening device that will stop and reopen the car door and hoistway door automatically if the door becomes obstructed by an object or person. The device shall be capable of completing these

operations without requiring contact for obstructions passing through the opening at heights of 5 inches and 29 inches; door reopening devices shall remain effective for at least 20 seconds, after which the doors may close; the minimum time from notification that a car is answering a call until the doors of that car start to close shall be 5 seconds; and the minimum time for elevator doors to remain fully open in response to a car call shall be 3 seconds. Standards §§ 206.6, 407.3.

c. Telephone

i. The telephone protrudes into the main walkway and is not detectable to a blind person using a cane. Unless protected by a cane detectable barrier, objects with their leading edges between 27 inches and 80 inches high shall not protrude into circulation paths more than 4 inches for wall-mounted elements, or 12 inches for free standing post- or pylon-mounted elements. Protruding objects (and cane-detectable barriers) shall not reduce the clear width of accessible routes or maneuvering spaces below minimum requirements. Standards §§ 206, 307.

d. Toilet Rooms

i. Visiting area

(1) Men's

(a) The pressure required to open the door is 19 pounds. Provide a door that requires no more than 5 pounds of force to open (not including the initial force needed to overcome inertia, retracting bolts, etc.). Standards §§ 206.5, 404.2.9.

(b) The toilet seat cover dispenser controls are mounted 57 inches above the finished floor. Provide a seat cover dispenser with operable parts and controls between 15 and 48 inches high and accompanied by clear floor space of 30 by 48 inches that allows a forward or parallel approach by a person using a wheelchair. Standards §§ 205.1, 305, 308.2, 308.3, 309.

(2) Women's

(a) The pressure required to open the door is 18 pounds. Provide a door that requires no more than 5 pounds of force to open (not including the initial force needed to overcome inertia, retracting bolts, etc.). Standards §§ 206.5, 404.2.9.

ii. Intake

(1) No accessible toilet stall is provided. Provide an accessible toilet

compartment at least 60 inches wide and at least 59 inches deep (or at least 56 inches deep with a wall-mounted toilet) such that all of the compartment's elements, including door, door hardware, toilet, size and arrangement, toe clearances, grab bars, controls, and dispensers, comply with the Standards. Standards §§ 213.3.1, 301.1, 404, 604, 604.8.1, 609.

e. The County will make the following modifications to the shower in the Intake Unit of the County Correctional Facility.

i. Intake

(1) The roll-in shower controls are not on the back wall and the fixed shower head is higher than 48 inches. Provide a transfer shower that is 36 inches by 36 inches clear inside with a clearance outside of 36 inches wide by 48 inch long, measured from the control wall; with a threshold that is no higher than ½ inch and beveled, rounded, or vertical; with a folding or non-folding rectangular or L-shaped seat mounted on the wall opposite the controls; with grab bars across the control wall and across the back wall to a point 18 inches from the control wall; with controls, faucets, and shower spray unit mounted on the wall opposite the seat between 38 and 48 inches above the floor and located 15 inches maximum from the centerline of the seat toward the shower opening…OR…provide a roll-in shower that is at least 30 inches wide by 60 deep with a minimum 30 inch wide by 60 inch long clear floor space at the face of the shower; with a threshold that is no higher than ¼ inch vertically, or between ¼ inch and no higher than ½ inch and beveled; where an optional seat is provided grab bars shall be on the back wall and the side wall opposite the seat and shall not be provided above the seat; where an optional seat is not provided grab bars shall be on three walls, installed 6 inches maximum from adjacent walls; where an optional seat is provided the controls, faucets, and shower spray unit shall be installed on the back wall adjacent to the seat wall 27 inches maximum from the seat wall; where an optional seat is not provided the controls, faucets, and shower spray unit may be installed on any wall of the shower. Transfer and roll-in shower controls, faucets, and shower spray unit shall be located above the grab bar but no higher than 48 inches above the floor, and operable with no more than 5 pounds of force, with one hand, and without tight grasping, pinching, or twisting of the wrist; shower enclosures provided shall not obstruct controls, faucets, spray units, and transfer between wheelchairs and optional shower seats. Standards §§ 213.3.6, 608, 609, 610.

f. Telephones in Intake

i. The telephones have no volume control. Provide accessible telephones in accordance with the following chart with clear floor space of at least 30 inches by 48 inches that allows either a forward or parallel approach such that bases, enclosures, and fixed seats do not impede approaches to the telephone. All operable parts of the telephone shall be mounted between 15 and 48 inches high; volume control shall be provided; the cord shall be at least 29 inches long from the telephone to the handset; and there shall be a picture of a telephone handset with radiating sound waves. Standards §§ 217, 305, 309, 703.7.2.3, 704, and Table 217.2.

ii. The telephone protrudes into the main walkway and is not detectable to a blind person using a cane. Unless protected by a cane detectable barrier, objects with their leading edges between 27 inches and 80 inches high shall not protrude into circulation paths more than 4 inches for wall-mounted elements, or 12 inches for free standing post- or pylon-mounted elements. Protruding objects (and cane-detectable barriers) shall not reduce the clear width of accessible routes or maneuvering spaces below minimum requirements. Standards §§ 206, 307.

g. Housing Unit

i. Stairs in Men's and Women's Units

(1) Provide stairs with closed risers, uniform tread width and riser height, a tread depth of at least 11 inches, a riser height between 4 inches and 7 inches, and nosings, treads, and risers that otherwise comply fully with the Standards. Standards §§ 206, 210, 504.

(2) The path of travel under the stairs has less than 80 inches of head room provided. Provide a minimum vertical clearance of 80 inches throughout. Where the vertical clearance is reduced to less than 80 inches, provide a guardrail or other barrier with a leading edge no more than 27 inches high. Standards §§ 206, 307.4.

ii. The County will make the following modifications to the shower stalls in both the men's and women's housing units.

(1) The shower compartments in the men's and women's units are not configured as either roll-in or transfer. Provide, in each unit, a transfer shower that is 36 inches by 36 inches clear inside with a clearance outside of 36 inches wide by 48 inch long, measured from the control wall; with a folding or non-folding rectangular or L-shaped seat mounted on the wall opposite the controls; a threshold that is no higher than ½ inch and beveled, rounded, or vertical; grab bars across the control wall and across the back wall to a point 18 inches from the control wall; and controls, faucets, and shower spray unit shall be mounted on the wall opposite the

seat between 38 and 48 inches above the floor and located 15 inches maximum from the centerline of the seat toward the shower opening…OR…provide a roll-in shower that is at least 30 inches wide by 60 deep with a minimum 30 inch wide by 60 inch long clear floor space at the face of the shower; where an optional seat is provided grab bars shall be on the back wall and the side wall opposite the seat and shall not be provided above the seat; where an optional seat is not provided grab bars shall be on three walls, installed 6 inches maximum from adjacent walls; controls, faucets, and shower spray unit shall be located above the grab bar no higher than 48 inches above the floor; where an optional seat is provided the controls, faucets, and shower spray unit shall be installed on the back wall adjacent to the seat wall 27 inches maximum from the seat wall. Transfer and roll-in shower controls shall be operable with no more than 5 pounds of force, with one hand, and without tight grasping, pinching, or twisting of the wrist, and shower enclosures provided shall not obstruct controls, faucets, spray units, and transfer between wheelchairs and shower seats. Standards §§ 213.3.6, 608, 609, 610.

iii. Toilet Rooms

(1) Women's

(a) No accessible mirror is provided. Provide at least one mirror such that, if it is mounted above a lavatory or countertop, it is mounted with the bottom edge of the reflecting surface no more than 40 inches high; or, if it is not mounted above a lavatory or countertop, it is mounted with the bottom edge of the reflecting surface no more than 35 inches high. Standards §§ 213.2, 603.3.

(b) No accessible toilet stall is provided. Provide an accessible toilet compartment at least 60 inches wide and at least 59 inches deep (or at least 56 inches deep with a wall-mounted toilet) such that all of the compartment's elements, including door, door hardware, toilet, size and arrangement, toe clearances, grab bars, controls, and dispensers, comply with the Standards. Standards §§ 213.3.1, 301.1, 404, 604, 604.8.1, 609.

(2) Men's

(a) The lavatory provides no knee or toe clearance. Provide a lavatory with the top of the rim or counter 34 inches high or less; knee clearance at least 30 inches wide, between 9 inches and 27 inches high, extending between 11 and 25

inches deep at 9 inches high, and extending at least 8 inches deep at 27 inches high; and toe clearance at least 30 inches wide and 9 inches high, and extending between 17 and 25 inches deep under the lavatory. Standards §§ 213.3.4, 306, 606.2, 606.3.

(b) No accessible toilet stall is provided. Provide an accessible toilet compartment at least 60 inches wide and at least 59 inches deep (or at least 56 inches deep with a wall-mounted toilet) such that all of the compartment's elements, including door, door hardware, toilet, size and arrangement, toe clearances, grab bars, controls, and dispensers, comply with the Standards. Standards §§ 213.3.1, 301.1, 404, 604, 604.8.1, 609.

iv. The County will make the following modifications to the transfer shower in Men's Unit.

(1) The shower compartment is 48 inches by 48 inches, the seat is not on the opposite wall the controls, and no hand-held shower spray unit is provided. Provide a transfer shower that is 36 inches by 36 inches clear inside with a clearance outside of 36 inches wide by 48 inch long, measured from the control wall; with a threshold that is no higher than ½ inch and beveled, rounded, or vertical; with a folding or non-folding rectangular or L-shaped seat mounted on the wall opposite the controls; with grab bars across the control wall and across the back wall to a point 18 inches from the control wall; with controls, faucets, and shower spray unit mounted on the wall opposite the seat between 38 and 48 inches above the floor and located 15 inches maximum from the centerline of the seat toward the shower opening…OR…provide a roll-in shower that is at least 30 inches wide by 60 deep with a minimum 30 inch wide by 60 inch long clear floor space at the face of the shower; with a threshold that is no higher than ¼ inch vertically, or between ¼ inch and no higher than ½ inch and beveled; where an optional seat is provided grab bars shall be on the back wall and the side wall opposite the seat and shall not be provided above the seat; where an optional seat is not provided grab bars shall be on three walls, installed 6 inches maximum from adjacent walls; where an optional seat is provided the controls, faucets, and shower spray unit shall be installed on the back wall adjacent to the seat wall 27 inches maximum from the seat wall; where an optional seat is not provided the controls, faucets, and shower spray unit may be installed on any wall of the shower. Transfer and roll-in shower controls, faucets, and shower spray unit shall be located above the grab bar but no higher than 48 inches above the floor, and operable with no more than 5 pounds of force, with one hand, and without

tight grasping, pinching, or twisting of the wrist; shower enclosures provided shall not obstruct controls, faucets, spray units, and transfer between wheelchairs and optional shower seats. Standards §§ 213.3.6, 608, 609, 610.

v. 2nd Floor Women's Single-user Toilet

(1) No toilet paper dispenser is provided. Provide a toilet paper dispenser that is mounted with its centerline between 7 and 9 inches from the front of the toilet and with its outlet between 15 and 48 inches high with continuous paper flow that does not control delivery. The dispenser shall be mounted either at least 1½ inches below the side grab bar or at least 12 inches above the side grab bar. Standards §§ 213.3.2, 604.7, 609.3.

vi. 2nd Floor Men's Single-user Toilet

(1) The toilet room sign is not mounted on the wall adjacent to the latch side of the door. Provide permanent room signage meeting the requirements of the Standards for raised characters, visual characters, and pictograms; accompanied by Grade 2 Braille. Tactile signs shall be mounted between 48 and 60 inches high on the wall adjacent to the latch side of the door or on the nearest adjacent wall (except that signs can be mounted on the inactive leaf of a double door or on the push side of doors with closers and without hold-open devices); and shall be located so that a clear floor space of at least 18 inches by 18 inches, centered on the tactile characters, is provided beyond the arc of any door's swing between the closed and 45 degrees open positions. Standards §§ 216, 703.

(2) The door to the toilet room has 6 inches of clear floor space on the latch side in the push direction. Provide maneuvering clearance at the door that complies with the following chart. Standards §§ 206.5, 404.2.4.1, and Table 404.2.4.1.

(3) No toilet paper dispenser is provided. Provide a toilet paper dispenser that is mounted with its centerline between 7 and 9 inches from the front of the toilet and with its outlet between 15 and 48 inches high with continuous paper flow that does not control delivery. The dispenser shall be mounted either at least 1½ inches below the side grab bar or at least 12 inches above the side grab bar. Standards §§ 213.3.2, 604.7, 609.3.

vii. Medical Unit

(1) The County shall make the following modifications to Shower #1.

(a) The transfer shower does not have compliant dimensions. Provide a transfer shower that is 36 inches by 36 inches clear inside with a clearance outside of 36 inches wide by 48 inch long, measured from the control wall; with a threshold that is no higher than ½ inch and beveled, rounded, or vertical; with a folding or non-folding rectangular or L-shaped seat mounted on the wall opposite the controls; with grab bars across the control wall and across the back wall to a point 18 inches from the control wall; with controls, faucets, and shower spray unit mounted on the wall opposite the seat between 38 and 48 inches above the floor and located 15 inches maximum from the centerline of the seat toward the shower opening…OR…provide a roll-in shower that is at least 30 inches wide by 60 deep with a minimum 30 inch wide by 60 inch long clear floor space at the face of the shower; with a threshold that is no higher than ¼ inch vertically, or between ¼ inch and no higher than ½ inch and beveled; where an optional seat is provided grab bars shall be on the back wall and the side wall opposite the seat and shall not be provided above the seat; where an optional seat is not provided grab bars shall be on three walls, installed 6 inches maximum from adjacent walls; where an optional seat is provided the controls, faucets, and shower spray unit shall be installed on the back wall adjacent to the seat wall 27 inches maximum from the seat wall; where an optional seat is not provided the controls, faucets, and shower spray unit may be installed on any wall of the shower. Transfer and roll-in shower controls, faucets, and shower spray unit shall be located above the grab bar but no higher than 48 inches above the floor, and operable with no more than 5 pounds of force, with one hand, and without tight grasping, pinching, or twisting of the wrist; shower enclosures provided shall not obstruct controls, faucets, spray units, and transfer between wheelchairs and optional shower seats. Standards §§ 213.3.6, 608, 609, 610.

(2) Single User Toilet Rooms

(a) No toilet room sign is provided. Provide toilet room signs with raised and Braille characters mounted on the wall adjacent to the latch side of the door with the centerline of the sign 60 inches above the finished floor and situated such that a person can approach within 3 inches of the sign without encountering an obstruction or standing within a door swing. Standards §§ 4.1.2(7)(d), 4.30.1, 4.30.4,

4.30.5, 4.30.6.

(b) No toilet paper dispenser is provided. Provide a toilet paper dispenser that is mounted within reach, with its top at least 1½ inches under the side grab bar, and centered at least 19 inches above the finished floor. Standards §§ 4.1.3(11), 4.22.4, 4.16.6, Fig. 29(b).

(c) The side grab bar at the toilet is 30 inches long. Provide a side grab bar that is at least 42 inches in overall length, with the far end mounted at least 54 inches from the rear wall and the closer end 12 inches or less from the rear wall. Standards §§ 4.1.3(11), 4.22.4, 4.16.4, Fig. 29(b).

(d) One toilet room has a 30 inch long rear grab bar and one toilet room has no rear grab bar. Provide a rear grab bar that is at least 36 inches in overall length, with the closer end no more than 6 inches from the side wall; mounted 33 to 36 inches above the finished floor; with a diameter between 1¼ and 1½ inches; with 1½ inches between the grab bar and the wall; and at least 1½ inches between the grab bar and any other object, such as a toilet seat cover dispenser. Standards §§ 4.1.3(11), 4.22.4, 4.16.4, 4.26.2, Fig. 29.

2. Within 33 months of entry of this Consent Decree, the County will complete the following modifications to the **Regional Juvenile Facility**, located at 2004 Harrison Avenue in Eureka.

a. Permanent room signs. The interior signs provided are not all mounted on the wall adjacent to the latch side of the door. Provide permanent room signage meeting the requirements of the Standards for raised characters, visual characters, and pictograms; accompanied by Grade 2 Braille. Tactile signs shall be mounted between 48 and 60 inches high on the wall adjacent to the latch side of the door or on the nearest adjacent wall (except that signs can be mounted on the inactive leaf of a double door or on the push side of doors with closers and without hold-open devices); and shall be located so that a clear floor space of at least 18 inches by 18 inches, centered on the tactile characters, is provided beyond the arc of any door's swing between the closed and 45 degrees open positions. Standards §§ 216, 703.

b. No accessible cell is provided. The County shall provide mobility features for a minimum of 3%, but no fewer than one of the total number of cells in the facility. Cells with mobility features much be provided for each classification level and special housing area, such as administrative and disciplinary segregation and medical isolation. Provide mobility features for at least one of each type of special holding or housing cell, such as a cell serving a particular courtroom. For cells required to have mobility features, provide the following: turning space

complying with § 304; where benches are provided, at least one bench complying with § 903; where beds are provided, a bed with clear floor space complying with §305 parallel to at least one side of the bed; where provided, at least one water closet, one lavatory, and one bathtub or shower complying with the applicable requirements of §§ 603 through 610. In cells and dormitories having more than 25 beds, provide clear floor space that complies with § 807.2.3 for a minimum of 5% of the beds. 28 C.F.R. § 35.151(k); Standards §§ 232, 304, 305, 603, 604, 606, 607, 608, 609, 610, 807.2, 903.

c. No accessible dining room table is provided. Provide at least 5% (but no fewer than 1) dining or work surfaces shall be available for use by people with mobility disabilities. Each accessible dining or work surface shall be on an accessible route; with clear floor space 30 inches wide by 48 inches deep positioned for a forward approach; with knee clearance at least 11 inches deep at 9 inches high and at least 8 inches deep at 27 inches high; and with a dining or work surface between 28 inches and 34 inches high. They shall be distributed throughout the facility, if applicable. Standards §§ 226, 305, 306, 902.

d. The reception counter protrudes into the walkway and is not detectable to a blind person using a cane. Unless protected by a cane detectable barrier, objects with their leading edges between 27 inches and 80 inches high shall not protrude into circulation paths more than 4 inches for wall-mounted elements, or 12 inches for free standing post- or pylon-mounted elements. Protruding objects (and cane-detectable barriers) shall not reduce the clear width of accessible routes or maneuvering spaces below minimum requirements. Standards §§ 206, 307.

e. Public Phone

i. Payphone by entrance

(1) The telephone coin slot is 61 inches above the finished floor. Provide an accessible telephone with clear floor space of at least 30 inches by 48 inches that allows either a forward or parallel approach such that bases, enclosures, and fixed seats do not impede approaches to the telephone. All operable parts of the telephone shall be mounted between 15 and 48 inches high. Standards §§ 217, 305, 309, 704.

(2) The telephone protrudes into the main walkway and is not detectable to a blind person using a cane. Unless protected by a cane detectable barrier, objects with their leading edges between 27 inches and 80 inches high shall not protrude into circulation paths more than 4 inches for wall-mounted elements, or 12 inches for free standing post- or pylon-mounted elements. Protruding objects (and cane-detectable barriers) shall not reduce the clear width of accessible routes or maneuvering spaces below minimum requirements. Standards §§ 206, 307.

f. Public Toilet Room

i. Women's

(1) The pressure required to open the door is 15 pounds. Provide a door that requires no more than 5 pounds of force to open (not including the initial force needed to overcome inertia, retracting bolts, etc.). Standards §§ 206.5, 404.2.9.

(2) The wall-mounted trash receptacle protrudes into the walkway and is not detectable to a blind person using a cane. Unless protected by a cane detectable barrier, objects with their leading edges between 27 inches and 80 inches high shall not protrude into circulation paths more than 4 inches for wall-mounted elements, or 12 inches for free standing post- or pylon-mounted elements. Protruding objects (and cane-detectable barriers) shall not reduce the clear width of accessible routes or maneuvering spaces below minimum requirements. Standards §§ 206, 307.

ii. Men's

(1) The pressure required to open the door is 17 pounds. Provide a door that requires no more than 5 pounds of force to open (not including the initial force needed to overcome inertia, retracting bolts, etc.). Standards §§ 206.5, 404.2.9.

(2) The wall-mounted trash receptacle protrudes into the walkway and is not detectable to a blind person using a cane. Unless protected by a cane detectable barrier, objects with their leading edges between 27 inches and 80 inches high shall not protrude into circulation paths more than 4 inches for wall-mounted elements, or 12 inches for free standing post- or pylon-mounted elements. Protruding objects (and cane-detectable barriers) shall not reduce the clear width of accessible routes or maneuvering spaces below minimum requirements. Standards §§ 206, 307.

g. Drinking Fountains

i. Waiting room

(1) No drinking fountain is provided for people who have difficulty bending or stooping. Provide 50% of all drinking fountains on each floor or exterior site with a spout outlet between 38 and 43 inches high and 50% of all drinking fountains on each floor or exterior site with a spout outlet no more than 36 inches high that otherwise complies with the Standards. At least one of each type

shall be provided. Standards §§ 211, 602.4, 602.7.

(2) The required clear floor space at the wall-mounted drinking fountain is obstructed by furniture placement. Provide a drinking fountain with a clear floor space of at least 30 inches by 48 inches (36 inches by 48 inches if the unit is in an alcove more than 24 inches deep) positioned for a forward approach and centered on the unit. Knee clearance shall be at least 11 inches deep at 9 inches high and at least 8 inches deep at 27 inches high. Standards §§ 211, 305, 306, 602.2.

ii. Secured Area

(1) No drinking fountain is provided for people who have difficulty bending or stooping. Provide 50% of all drinking fountains on each floor or exterior site with a spout outlet between 38 and 43 inches high and 50% of all drinking fountains on each floor or exterior site with a spout outlet no more than 36 inches high that otherwise complies with the Standards. At least one of each type shall be provided. Standards §§ 211, 602.4, 602.7.

(2) The wall mounted drinking fountain protrudes into the walkway and is not detectable to a blind person using a cane. Unless protected by a cane detectable barrier, objects with their leading edges between 27 inches and 80 inches high shall not protrude into circulation paths more than 4 inches for wall-mounted elements, or 12 inches for free standing post- or pylon-mounted elements. Protruding objects (and cane-detectable barriers) shall not reduce the clear width of accessible routes or maneuvering spaces below minimum requirements. Standards §§ 206, 307.

h. Locker Rooms

i. Women

(1) No visual alarm appliance is provided in the toilet room. Provide visible fire alarm devices in toilet rooms, hallways, lobbies, meeting rooms, and any other area for common use. Standards §§ 215, 702.

ii. Men's

(1) No visual alarm appliance in the toilet room. Provide visible fire alarm devices in toilet rooms, hallways, lobbies, meeting rooms, and any other area for common use. Standards §§ 4.1.3(14), 4.28.1, 4.28.3, 215, 702.

(2) No accessible shower is provided. Provide a transfer shower that is 36 inches by 36 inches clear inside with a clearance outside of 36 inches wide by 48 inch long, measured from the control wall; with a threshold that is no higher than ½ inch and beveled, rounded, or vertical; with a folding or non-folding rectangular or L-shaped seat mounted on the wall opposite the controls; with grab bars across the control wall and across the back wall to a point 18 inches from the control wall; with controls, faucets, and shower spray unit mounted on the wall opposite the seat between 38 and 48 inches above the floor and located 15 inches maximum from the centerline of the seat toward the shower opening…OR…provide a roll-in shower that is at least 30 inches wide by 60 deep with a minimum 30 inch wide by 60 inch long clear floor space at the face of the shower; with a threshold that is no higher than ¼ inch vertically, or between ¼ inch and no higher than ½ inch and beveled; where an optional seat is provided grab bars shall be on the back wall and the side wall opposite the seat and shall not be provided above the seat; where an optional seat is not provided grab bars shall be on three walls, installed 6 inches maximum from adjacent walls; where an optional seat is provided the controls, faucets, and shower spray unit shall be installed on the back wall adjacent to the seat wall 27 inches maximum from the seat wall; where an optional seat is not provided the controls, faucets, and shower spray unit may be installed on any wall of the shower. Transfer and roll-in shower controls, faucets, and shower spray unit shall be located above the grab bar but no higher than 48 inches above the floor, and operable with no more than 5 pounds of force, with one hand, and without tight grasping, pinching, or twisting of the wrist; shower enclosures provided shall not obstruct controls, faucets, spray units, and transfer between wheelchairs and optional shower seats. Standards §§ 213.3.6, 608, 609, 610.

i. Staff Toilet Room (single user)

i. The toilet seat cover dispenser is obstructed by the trash receptacle and side table. Operable parts and controls of this element shall be no more than 48 inches high for a forward reach, or no more than 44 inches high if over an obstruction between 20 and 25 inches deep (for a forward reach, obstructions may not be deeper than 25 inches and obstructions must allow knee space); or mounted not more than 48 inches high for a side reach, or no more than 46 inches high if over an obstruction between 10 and 24 inches deep (for a side reach, obstructions may not be deeper than 24 inches); and accompanied by clear floor space of 30 inches by 48 inches that allows a forward or parallel approach, respectively, by a person using a wheelchair. Standards §§ 205.1, 305, 308.2, 308.3.

ii. The toilet clear floor space is obstructed by the side table and the trash receptacle. Provide clearance at the toilet that is at least 60 inches wide and 56 inches deep. This clearance may overlap with the toilet, grab bars, dispensers, sanitary napkin disposal, coat hooks, shelves, accessible routes, clear floor space and clearances for other fixtures, and turning space; but no other fixtures or obstructions, including lavatories, may be located within this clearance. Standards §§ 213.3.2, 604.3.

3. Within 15 months of the entry of this Consent Decree, the County will complete the following modifications to the **Humboldt County Main Library**, located at 1313 Third Street in Eureka.

a. Administrative Office, 2nd Floor - The door pressure required to open the door is 13 pounds. Provide a door that requires no more than 5 pounds of force to open (not including the initial force needed to overcome inertia, retracting bolts, etc.). Standards §§ 206.5, 404.2.9.

b. Elevators - public and staff

i. The elevator emergency communication system has no provisions for silent calls. Provide a two-way communication system that provides both audible and visible signals, with operable parts between 15 and 48 inches high, and identified by raised characters and Braille adjacent to the device. If the system uses a handset, the cord shall be at least 29 inches long. If the system is located in a closed compartment, the compartment door hardware shall operate without tight grasping, pinching or twisting of the wrist. Standards §§ 206.6, 308, 309.4, 407.4.9, 703.2, 708.

c. Locker Rooms

i. Men's

(1) The pressure required to open the door is 15 pounds. Provide a door that requires no more than 5 pounds of force to open (not including the initial force needed to overcome inertia, retracting bolts, etc.). Standards §§ 206.5, 404.2.9.

(2) The lavatory hot water pipes are not insulated or otherwise configured to protect against contact. Provide water supply and drain pipes insulated or otherwise configured to protect against contact. There shall be no sharp or abrasive surfaces underneath the lavatory or sink. Standards §§ 213.3.4, 606.5.

(3) The shower compartment is 40 inches deep by 42 inches wide. Provide a transfer shower that is 36 inches by 36 inches clear inside with a clearance outside of 36 inches wide by 48 inch long, measured from the control wall; with a threshold that is no higher

than ½ inch and beveled, rounded, or vertical; with a folding or non-folding rectangular or L-shaped seat mounted on the wall opposite the controls; with grab bars across the control wall and across the back wall to a point 18 inches from the control wall; with controls, faucets, and shower spray unit mounted on the wall opposite the seat between 38 and 48 inches above the floor and located 15 inches maximum from the centerline of the seat toward the shower opening…OR…provide a roll-in shower that is at least 30 inches wide by 60 deep with a minimum 30 inch wide by 60 inch long clear floor space at the face of the shower; with a threshold that is no higher than ¼ inch vertically, or between ¼ inch and no higher than ½ inch and beveled; where an optional seat is provided grab bars shall be on the back wall and the side wall opposite the seat and shall not be provided above the seat; where an optional seat is not provided grab bars shall be on three walls, installed 6 inches maximum from adjacent walls; where an optional seat is provided the controls, faucets, and shower spray unit shall be installed on the back wall adjacent to the seat wall 27 inches maximum from the seat wall; where an optional seat is not provided the controls, faucets, and shower spray unit may be installed on any wall of the shower. Transfer and roll-in shower controls, faucets, and shower spray unit shall be located above the grab bar but no higher than 48 inches above the floor, and operable with no more than 5 pounds of force, with one hand, and without tight grasping, pinching, or twisting of the wrist; shower enclosures provided shall not obstruct controls, faucets, spray units, and transfer between wheelchairs and optional shower seats. Standards §§ 213.3.6, 608, 609, 610. Standards §§ 213.3.6, 608, 609, 610.

ii. Women's

(1) The pressure required to open the door is 15 pounds. Provide a door that requires no more than 5 pounds of force to open (not including the initial force needed to overcome inertia, retracting bolts, etc.). Standards §§ 206.5, 404.2.9.

(2) The lavatory hot water pipes are not insulated or otherwise configured to protect against contact. Provide water supply and drain pipes insulated or otherwise configured to protect against contact. There shall be no sharp or abrasive surfaces underneath the lavatory or sink. Standards §§ 213.3.4, 606.5.

(3) The shower compartment is 108 inches deep by 45 inches wide. Provide a transfer shower that is 36 inches by 36 inches clear inside with a clearance outside of 36 inches wide by 48 inch long, measured from the control wall; with a threshold that is no higher

than ½ inch and beveled, rounded, or vertical; with a folding or non-folding rectangular or L-shaped seat mounted on the wall opposite the controls; with grab bars across the control wall and across the back wall to a point 18 inches from the control wall; with controls, faucets, and shower spray unit mounted on the wall opposite the seat between 38 and 48 inches above the floor and located 15 inches maximum from the centerline of the seat toward the shower opening…OR…provide a roll-in shower that is at least 30 inches wide by 60 deep with a minimum 30 inch wide by 60 inch long clear floor space at the face of the shower; with a threshold that is no higher than ¼ inch vertically, or between ¼ inch and no higher than ½ inch and beveled; where an optional seat is provided grab bars shall be on the back wall and the side wall opposite the seat and shall not be provided above the seat; where an optional seat is not provided grab bars shall be on three walls, installed 6 inches maximum from adjacent walls; where an optional seat is provided the controls, faucets, and shower spray unit shall be installed on the back wall adjacent to the seat wall 27 inches maximum from the seat wall; where an optional seat is not provided the controls, faucets, and shower spray unit may be installed on any wall of the shower. Transfer and roll-in shower controls, faucets, and shower spray unit shall be located above the grab bar but no higher than 48 inches above the floor, and operable with no more than 5 pounds of force, with one hand, and without tight grasping, pinching, or twisting of the wrist; shower enclosures provided shall not obstruct controls, faucets, spray units, and transfer between wheelchairs and optional shower seats. Standards §§ 213.3.6, 608, 609, 610.

d. Public Toilet Rooms

i. Men's

(1) The pressure required to open the door is 14 pounds. Provide a door that requires no more than 5 pounds of force to open (not including the initial force needed to overcome inertia, retracting bolts, etc.). Standards §§ 206.5, 404.2.9.

(2) The lavatory hot water pipes are not insulated or otherwise configured to protect against contact. Provide water supply and drain pipes insulated or otherwise configured to protect against contact. There shall be no sharp or abrasive surfaces underneath the lavatory or sink. Standards §§ 213.3.4, 606.5.

ii. Women's

(1) The pressure required to open the door is 17 pounds. Provide a

door that requires no more than 5 pounds of force to open (not including the initial force needed to overcome inertia, retracting bolts, etc.). Standards §§ 206.5, 404.2.9.

(2) The lavatory hot water pipes are not insulated or otherwise configured to protect against contact. Provide water supply and drain pipes insulated or otherwise configured to protect against contact. There shall be no sharp or abrasive surfaces underneath the lavatory or sink. Standards §§ 213.3.4, 606.5.

4. Within 15 months of entry of this Consent Decree, the County will complete the following modifications to the **Humboldt County Fairgrounds, Livestock Toilet Rooms** located at 1250 5th Street in Ferndale.

a. Toilet rooms - men's and women's designated accessible compartment. No accessible coat hook is provided. Provide a coat hook or towel hook between 15 and 48 inches high accompanied by clear floor space of 30 by 48 inches. Standards §§ 213.3.7, 305, 308, 603.4.

b. Air Dryer. The air dryers in both the men's and women's toilet rooms protrude into the walkway and are not detectable to a blind person using a cane. Unless protected by a cane detectable barrier, objects with their leading edges between 27 inches and 80 inches high shall not protrude into circulation paths more than 4 inches for wall-mounted elements, or 12 inches for free standing post- or pylon-mounted elements. Protruding objects (and cane-detectable barriers) shall not reduce the clear width of accessible routes or maneuvering spaces below minimum requirements. Standards §§ 206, 307.

c. Showers

i. Women's

(1) The bench is 12 inches wide. Provide a bench with a seat at least 42 inches long and between 20 and 24 inches deep that is either affixed to a wall or has a back support that is at least 42 inches long, is no more than 2½ inches horizontally from the rear edge of the seat, and extends from no more than 2 inches to at least 18 inches above the seat. The top of the seat shall be between 17 and 19 inches high and shall provide clear floor space at the end of the bench parallel to the bench's short axis. Standards §§ 222.1, 305, 803.4, 903.

(2) No accessible coat hook is provided. Provide a coat hook or towel hook between 15 and 48 inches high accompanied by clear floor space of 30 by 48 inches. Standards §§ 213.3.7, 305, 308, 603.4.

ii. Men's

(1) The bench is 12 inches wide. Provide a bench with a seat at least 42 inches long and between 20 and 24 inches deep that is either affixed to a wall or has a back support that is at least 42 inches long, is no more than 2½ inches horizontally from the rear edge of the seat, and extends from no more than 2 inches to at least 18 inches above the seat. The top of the seat shall be between 17 and 19 inches high and shall provide clear floor space at the end of the bench parallel to the bench's short axis. Standards §§ 222.1, 305, 803.4, 903.

(2) No accessible coat hook is provided. Provide a coat hook or towel hook between 15 and 48 inches high accompanied by clear floor space of 30 by 48 inches. Standards §§ 213.3.7, 305, 308, 603.4.

5. Within 9 months of entry of this Consent Decree, the County will complete the following modifications to **Clam Beach Park**, located off Highway 101 near McKinleyville.

a. Parking - Camper's Only

i. No designated accessible parking space, access aisles, and no vertical sign is provided designating the existing space as reserved for people with disabilities. On the shortest accessible route to the accessible entrance(s), provide standard accessible and van accessible parking spaces designated as reserved for people with disabilities, as required in the following chart. Standard accessible spaces shall be at least 96 inches wide and served by access aisles at least 60 inches wide. Van accessible spaces shall be at least 132 inches wide and served by access aisles at least 60 inches wide, or at least 96 inches wide and served by access aisles at least 96 inches wide. Access aisles shall extend the full length of the parking spaces they serve and shall be marked so as to discourage parking in them. At sites with 5 or more parking spaces, provide vertical signs with the International Symbol of Accessibility at all spaces designated as reserved for persons with disabilities, mounted at least 60 inches high to the bottom of the sign. At van accessible spaces, provide an additional "van accessible" sign mounted at least 60 inches high to the bottom of the sign. All spaces and access aisles for persons with disabilities shall contain no changes in level, with slopes and cross-slopes not exceeding 2.08%, and their surfaces shall be firm, stable, and slip-resistant. If the parking facility does not serve a particular building or facility, provide accessible parking on the shortest accessible route to an accessible pedestrian entrance of the parking facility. If the parking facility serves a building with multiple accessible entrances or multiple buildings or facilities, provide dispersed parking spaces located on an accessible route closest to the accessible entrances. If the parking facility is a parking garage or otherwise has limitations on vertical clearances, provide minimum vertical clearance of 98 inches at the van accessible parking spaces and along at

least one vehicle access route to such spaces from site entrances and exits. Standards §§ 208, 302, 502, 703.7.2.1.

Total Spaces Provided	Total Accessible Spaces (Including Van Accessible)	Van Accessible Spaces
1 to 25	1	1
26 to 50	2	1
51 to 75	3	1
76 to 100	4	1
101 to 150	5	1
151 to 200	6	1
201 to 300	7	2
301 to 400	8	2
401 to 500	9	2
501 to 1000	2% of total	1 in every 6 accessible spaces
1001 and over	20, plus 1 for each 100 over 1000	1 in every 6 accessible spaces

b. Camper's Only Beach - No accessible route is provided to the beach. To each area, feature, or element described, provide at least one accessible route that coincides with or is located in the same area as general circulation paths. The accessible route must have a minimum clear width of 36 inches (except that it may narrow to no less than 32 inches for a length of no more than 24 inches), or a minimum clear width of 42 inches if there is a U-turn around an obstruction less than 48 inches wide; have passing spaces at least every 200 feet; have a minimum clear headroom of 80 inches; have a surface that is firm, stable, and slip resistant; have, in the absence of a curb ramp, ramp, elevator, or platform lift, no level changes in excess of ½ inch vertically; have no level changes greater than ¼ inch vertically unless they are beveled with a slope no greater than 50%; and have a running slope no greater than 5% (or have been constructed as a fully accessible ramp) and a cross slope no greater than 2.08%. Standards §§ 206, 301.1, 401.1.

c. Toilet Rooms - Camper's Only

i. Women's

(1) The toilet room sign is not mounted on the wall adjacent to the latch side of the door. Provide a toilet room sign with raised and Braille characters. Tactile signs shall be mounted on the wall adjacent to the latch side of the door or the nearest adjacent wall

(except that signs can be mounted on the push side of doors with closers and without hold-open devices); mounted 48 inches minimum from floor to the baseline of the lowest tactile character and 60 inches maximum from the floor to the baseline of the highest tactile character; and located so that a clear floor space of at least 18 inches by 18 inches, centered on the tactile characters, is provided beyond the arc of any door's swing between the closed and 45 degrees open positions. If not all toilet rooms are accessible, provide signage with the International Symbol of Accessibility at all accessible toilet rooms. Standards §§ 216.2, 703.

(2) The toilet lacks sufficient clear floor space. Provide clearance at the toilet that is at least 60 inches wide and 56 inches deep. This clearance may overlap with the toilet, grab bars, dispensers, sanitary napkin disposal, coat hooks, shelves, accessible routes, clear floor space and clearances for other fixtures, and turning space; but no other fixtures or obstructions, including lavatories, may be located within this clearance. Standards §§ 213.3.2, 604.3.

(3) The side grab bar at the toilet is obstructed by the toilet paper dispenser. Provide grab bars that have at least 1½ inches between the grab bar and any object projecting beside or below it and at least 12 inches between the grab bar and any object projecting above it. Standards §§ 213.3.2, 604.5, 609.3.

ii. Men's

(1) The toilet room sign is not mounted on the wall adjacent to the latch side of the door. Provide a toilet room sign with raised and Braille characters. Tactile signs shall be mounted on the wall adjacent to the latch side of the door or the nearest adjacent wall (except that signs can be mounted on the push side of doors with closers and without hold-open devices); mounted 48 inches minimum from floor to the baseline of the lowest tactile character and 60 inches maximum from the floor to the baseline of the highest tactile character; and located so that a clear floor space of at least 18 inches by 18 inches, centered on the tactile characters, is provided beyond the arc of any door's swing between the closed and 45 degrees open positions. If not all toilet rooms are accessible, provide signage with the International Symbol of Accessibility at all accessible toilet rooms. Standards §§ 216.2, 703.

(2) The toilet lacks sufficient clear floor space. Provide clearance at the toilet that is at least 60 inches wide and 56 inches deep. This clearance may overlap with the toilet, grab bars, dispensers,

sanitary napkin disposal, coat hooks, shelves, accessible routes, clear floor space and clearances for other fixtures, and turning space; but no other fixtures or obstructions, including lavatories, may be located within this clearance. Standards §§ 213.3.2, 604.3.

(3) Access to the side grab bar at the toilet is obstructed by the toilet paper dispenser. Provide grab bars that have at least 1½ inches between the grab bar and any object projecting beside or below it and at least 12 inches between the grab bar and any object projecting above it. Standards §§ 213.3.2, 604.5, 609.3.

d. Parking - Day Use Only

i. The designated accessible parking has no access aisles and no vertical signage, and no van accessible parking space is provided. On the shortest accessible route to the accessible entrance(s), provide standard accessible and van accessible parking spaces designated as reserved for people with disabilities, as required in the following chart. Standard accessible spaces shall be at least 96 inches wide and served by access aisles at least 60 inches wide. Van accessible spaces shall be at least 132 inches wide and served by access aisles at least 60 inches wide, or at least 96 inches wide and served by access aisles at least 96 inches wide. Access aisles shall extend the full length of the parking spaces they serve and shall be marked so as to discourage parking in them. At sites with 5 or more parking spaces, provide vertical signs with the International Symbol of Accessibility at all spaces designated as reserved for persons with disabilities, mounted at least 60 inches high to the bottom of the sign. At van accessible spaces, provide an additional "van accessible" sign mounted at least 60 inches high to the bottom of the sign. All spaces and access aisles for persons with disabilities shall contain no changes in level, with slopes and cross-slopes not exceeding 2.08%, and their surfaces shall be firm, stable, and slip-resistant. If the parking facility does not serve a particular building or facility, provide accessible parking on the shortest accessible route to an accessible pedestrian entrance of the parking facility. If the parking facility serves a building with multiple accessible entrances or multiple buildings or facilities, provide dispersed parking spaces located on an accessible route closest to the accessible entrances. If the parking facility is a parking garage or otherwise has limitations on vertical clearances, provide minimum vertical clearance of 98 inches at the van accessible parking spaces and along at least one vehicle access route to such spaces from site entrances and exits. Standards §§ 208, 302, 502, 703.7.2.1.

Total Spaces Provided	**Total Accessible Spaces (Including Van Accessible)**	**Van Accessible Spaces**
1 to 25	1	1

26 to 50	2	1
51 to 75	3	1
76 to 100	4	1
101 to 150	5	1
151 to 200	6	1
201 to 300	7	2
301 to 400	8	2
401 to 500	9	2
501 to 1000	2% of total	1 in every 6 accessible spaces
1001 and over	20, plus 1 for each 100 over 1000	1 in every 6 accessible spaces

e. Toilet Rooms - Day Use Only

i. Men's

(1) The toilet room sign does not have Braille. Provide a toilet room sign with raised and Braille characters. Tactile signs shall be mounted on the wall adjacent to the latch side of the door or the nearest adjacent wall (except that signs can be mounted on the push side of doors with closers and without hold-open devices); mounted 48 inches minimum from floor to the baseline of the lowest tactile character and 60 inches maximum from the floor to the baseline of the highest tactile character; and located so that a clear floor space of at least 18 inches by 18 inches, centered on the tactile characters, is provided beyond the arc of any door's swing between the closed and 45 degrees open positions. If not all toilet rooms are accessible, provide signage with the International Symbol of Accessibility at all accessible toilet rooms. Standards §§ 216.2, 703.

(2) The toilet lacks sufficient clear floor space. Provide clearance at the toilet that is at least 60 inches wide and 56 inches deep. This clearance may overlap with the toilet, grab bars, dispensers, sanitary napkin disposal, coat hooks, shelves, accessible routes, clear floor space and clearances for other fixtures, and turning space; but no other fixtures or obstructions, including lavatories, may be located within this clearance. Standards §§ 213.3.2, 604.3.

(3) The side grab bar at the toilet is obstructed by the toilet paper dispenser interferes with its use. Provide grab bars that have at

least 1½ inches between the grab bar and any object projecting beside or below it and at least 12 inches between the grab bar and any object projecting above it. Standards §§ 213.3.2, 604.5, 609.3.

ii. Women's

(1) The toilet room sign does not have Braille. Provide a toilet room sign with raised and Braille characters. Tactile signs shall be mounted on the wall adjacent to the latch side of the door or the nearest adjacent wall (except that signs can be mounted on the push side of doors with closers and without hold-open devices); mounted 48 inches minimum from floor to the baseline of the lowest tactile character and 60 inches maximum from the floor to the baseline of the highest tactile character; and located so that a clear floor space of at least 18 inches by 18 inches, centered on the tactile characters, is provided beyond the arc of any door's swing between the closed and 45 degrees open positions. If not all toilet rooms are accessible, provide signage with the International Symbol of Accessibility at all accessible toilet rooms. Standards §§ 216.2, 703.

(2) The toilet lacks sufficient clear floor space. Provide clearance at the toilet that is at least 60 inches wide and 56 inches deep. This clearance may overlap with the toilet, grab bars, dispensers, sanitary napkin disposal, coat hooks, shelves, accessible routes, clear floor space and clearances for other fixtures, and turning space; but no other fixtures or obstructions, including lavatories, may be located within this clearance. Standards §§ 213.3.2, 604.3.

(3) Access to the side grab bar at the toilet is obstructed by the toilet paper dispenser. Provide grab bars that have at least 1½ inches between the grab bar and any object projecting beside or below it and at least 12 inches between the grab bar and any object projecting above it. Standards §§ 213.3.2, 604.5, 609.3.

6. Within 9 months of entry of this Consent Decree, the County will complete the following modifications to the **Humboldt County Animal Shelter**, located at 980 Lycoming Avenue in McKinleyville.

a. Door pressures

i. Dog Holding - The pressure required to open the door is 16 pounds. Provide a door that requires no more than 5 pounds of force to open (not including the initial force needed to overcome inertia, retracting bolts, etc.). Standards §§ 206.5, 404.2.9.

ii. Dog Quarantine - The pressure required to open the door is 12 pounds.

Provide a door that requires no more than 5 pounds of force to open (not including the initial force needed to overcome inertia, retracting bolts, etc.). Standards §§ 206.5, 404.2.9.

iii. Puppies - The pressure required to open the door is 14 pounds. Provide a door that requires no more than 5 pounds of force to open (not including the initial force needed to overcome inertia, retracting bolts, etc.). Standards §§ 206.5, 404.2.9.

iv. Large Dogs - The pressure required to open the door is 8 pounds. Provide a door that requires no more than 5 pounds of force to open (not including the initial force needed to overcome inertia, retracting bolts, etc.). Standards §§ 206.5, 404.2.9.

v. Cats - The pressure required to open the door is 13 pounds. Provide a door that requires no more than 5 pounds of force to open (not including the initial force needed to overcome inertia, retracting bolts, etc.). Standards §§ 206.5, 404.2.9.

b. Toilet Rooms

i. Women's

(1) The pressure required to open the door is 12 pounds. Provide a door that requires no more than 5 pounds of force to open (not including the initial force needed to overcome inertia, retracting bolts, etc.). Standards §§ 206.5, 404.2.9.

(2) No visual alarm appliance is provided. Provide visible fire alarm devices in toilet rooms, hallways, lobbies, meeting rooms, and any other area for common use. Standards §§ 215, 702.

ii. Men's

(1) The pressure required to open the door is 11 pounds. Provide a door that requires no more than 5 pounds of force to open (not including the initial force needed to overcome inertia, retracting bolts, etc.). Standards §§ 206.5, 404.2.9.

(2) No visual alarm appliance is provided. Provide visible fire alarm devices in toilet rooms, hallways, lobbies, meeting rooms, and any other area for common use. Standards §§ 215, 702.

iii. Employee Toilet Room and Shower

(1) No accessible mirror is provided. Provide at least one mirror such that, if it is mounted above a lavatory or countertop, it is mounted with the bottom edge of the reflecting surface no more than 40

inches high; or, if it is not mounted above a lavatory or countertop, it is mounted with the bottom edge of the reflecting surface no more than 35 inches high. Standards §§ 213.2, 603.3.

(2) The roll-in shower has a one inch threshold curb. Provide a shower with a threshold that is no higher than ¼ inch vertically, or between ¼ inch and no higher than ½ inch and beveled. Standards §§ 213.3.6, 608.7.

7. Within 15 months of entry of this Consent Decree, the County will complete the following modifications to the boat dock and toilet rooms at **Fields Landing Boat Ramp** on Railroad Avenue in Fields Landing.

a. Parking

i. No designated accessible van parking space is provided, no access aisle is provided, and no signage is provided. The designated accessible parking has no access aisles and no vertical signage, and no van accessible parking space is provided. On the shortest accessible route to the accessible entrance(s), provide standard accessible and van accessible parking spaces designated as reserved for people with disabilities, as required in the following chart. Standard accessible spaces shall be at least 96 inches wide and served by access aisles at least 60 inches wide. Van accessible spaces shall be at least 132 inches wide and served by access aisles at least 60 inches wide, or at least 96 inches wide and served by access aisles at least 96 inches wide. Access aisles shall extend the full length of the parking spaces they serve and shall be marked so as to discourage parking in them. At sites with 5 or more parking spaces, provide vertical signs with the International Symbol of Accessibility at all spaces designated as reserved for persons with disabilities, mounted at least 60 inches high to the bottom of the sign. At van accessible spaces, provide an additional "van accessible" sign mounted at least 60 inches high to the bottom of the sign. All spaces and access aisles for persons with disabilities shall contain no changes in level, with slopes and cross-slopes not exceeding 2.08%, and their surfaces shall be firm, stable, and slip-resistant. If the parking facility does not serve a particular building or facility, provide accessible parking on the shortest accessible route to an accessible pedestrian entrance of the parking facility. If the parking facility serves a building with multiple accessible entrances or multiple buildings or facilities, provide dispersed parking spaces located on an accessible route closest to the accessible entrances. If the parking facility is a parking garage or otherwise has limitations on vertical clearances, provide minimum vertical clearance of 98 inches at the van accessible parking spaces and along at least one vehicle access route to such spaces from site entrances and exits. Standards §§ 208, 302, 502, 703.7.2.1.

Total Spaces Provided	Total Accessible Spaces (Including Van Accessible)	Van Accessible Spaces
1 to 25	1	1
26 to 50	2	1
51 to 75	3	1
76 to 100	4	1
101 to 150	5	1
151 to 200	6	1
201 to 300	7	2
301 to 400	8	2
401 to 500	9	2
501 to 1000	2% of total	1 in every 6 accessible spaces
1001 and over	20, plus 1 for each 100 over 1000	1 in every 6 accessible spaces

b. Toilet Rooms

ii. Women's

(1) The toilet room sign is not mounted on wall adjacent to the latch side of the door 60 inches above the finished floor, and the Braille sign is mounted 114 inches high. Provide a toilet room sign with raised and Braille characters. Tactile signs shall be mounted on the wall adjacent to the latch side of the door or the nearest adjacent wall (except that signs can be mounted on the push side of doors with closers and without hold-open devices); mounted 48 inches minimum from floor to the baseline of the lowest tactile character and 60 inches maximum from the floor to the baseline of the highest tactile character; and located so that a clear floor space of at least 18 inches by 18 inches, centered on the tactile characters, is provided beyond the arc of any door's swing between the closed and 45 degrees open positions. If not all toilet rooms are accessible, provide signage with the International Symbol of Accessibility at all accessible toilet rooms. Standards §§ 216.2, 703.

(2) The toilet flush control is on the closed side. Provide a flush control mounted on the "open" side of the toilet's clear floor space, between 15 and 48 inches high, and requiring a maximum of 5 pounds of force to operate; or provide an automatic flush device. Standards §§ 213.3.2, 309.4, 604.6.

iii. Men's

(1) The toilet room sign is not mounted on wall adjacent to the latch side of the door 60 inches above the finished floor, and the Braille sign is mounted 114 inches high. Provide a toilet room sign with raised and Braille characters. Tactile signs shall be mounted on the wall adjacent to the latch side of the door or the nearest adjacent wall (except that signs can be mounted on the push side of doors with closers and without hold-open devices); mounted 48 inches minimum from floor to the baseline of the lowest tactile character and 60 inches maximum from the floor to the baseline of the highest tactile character; and located so that a clear floor space of at least 18 inches by 18 inches, centered on the tactile characters, is provided beyond the arc of any door's swing between the closed and 45 degrees open positions. If not all toilet rooms are accessible, provide signage with the International Symbol of Accessibility at all accessible toilet rooms. Standards §§ 216.2, 703.

(2) The toilet flush control is on the closed side. Provide a flush control mounted on the "open" side of the toilet's clear floor space, between 15 and 48 inches high, and requiring a maximum of 5 pounds of force to operate; or provide an automatic flush device. Standards §§ 213.3.2, 309.4, 604.6.

b. Drinking Fountain (drinking fountain not functioning during visit)

i. The drinking fountain spout is 38 inches above the finished floor. Provide 50% of all drinking fountains on each floor or exterior site with a spout outlet between 38 and 43 inches high and 50% of all drinking fountains on each floor or exterior site with a spout outlet no more than 36 inches high that otherwise complies with the Standards. At least one of each type shall be provided. Standards §§ 211, 602.4, 602.7.

ii. The drinking fountain control is not operable with one hand. Provide a drinking fountain with controls that are operable with one hand, that require 5 pounds of force or less to operate, and that can be operated without tight grasping, pinching, or twisting of the wrist. Standards §§ 211, 602.3, 309.4.

iii. The drinking fountain protrudes into the main walkway and is not detectable to a blind person using a cane. Unless protected by a cane detectable barrier, objects with their leading edges between 27 inches and 80 inches high shall not protrude into circulation paths more than 4 inches for wall-mounted elements, or 12 inches for free standing post- or pylon-mounted elements. Protruding objects (and cane-detectable barriers) shall

not reduce the clear width of accessible routes or maneuvering spaces below minimum requirements. Standards §§ 206, 307.

Attachment H: Modifications to Altered Facilities

Please Note: Paragraph 47 of the Consent Decree requires that within nine months of the entry of this Consent Decree, the County provide signage as necessary to comply with 28 C.F.R. § 35.163(b), after having surveyed all facilities that are the subject of this Consent Decree for the purpose of identifying those that have multiple entrances not all of which are accessible.

The term "Standards" refers to the 2010 ADA Standards for Accessible Design (28 C.F.R. § 35.104 (Title II) (defining the "2010 ADA Standards" as the requirements set forth in appendices B and D to 36 C.F.R. part 1191 and the requirements contained in 28 C.F.R. § 35.151.)). All citations are to the Standards, unless otherwise noted. In general, when determining the number of accessible elements required (*i.e.*, assistive listening system receivers, wheelchair seating spaces, accessible parking spaces, play components, etc.), always round UP to the nearest whole number.

In order that the following spaces and elements in County facilities, which were altered after January 26, 1992, are readily accessible to and usable by persons with disabilities, the County will take the following actions:

1. Within 27 months of entry of this Consent Decree, the County will complete the following modifications to the **Humboldt County Courthouse**, located at 825 5th Street in Eureka.

    a. Offices

        i. The pressure required to open the door to Revenue Recovery/General Services is 10 pounds. Provide a door that requires no more than 5 pounds of force to open (not including the initial force needed to overcome inertia, retracting bolts, etc.). Standards §§ 206.5, 404.2.9.

        ii. The Revenue Recovery counter protrudes into the walkway and is not detectable to a blind person using a cane. Unless protected by a cane detectable barrier, objects with their leading edges between 27 inches and 80 inches high shall not protrude into circulation paths more than 4 inches for wall-mounted elements, or 12 inches for free standing post- or pylon-mounted elements. Protruding objects (and cane-detectable barriers) shall not reduce the clear width of accessible routes or maneuvering spaces below minimum requirements. Standards §§ 206, 307.

        iii. The pressure required to open the door to General Services is 10 pounds. Provide a door that requires no more than 5 pounds of force to open (not including the initial force needed to overcome inertia, retracting bolts, etc.). Standards §§ 206.5, 404.2.9.

    b. Toilet Rooms, 1st floor

        i. Women's

            (1) The side grab bar at the toilet is mounted with the far end 48 inches

from the rear wall. Provide a side grab bar that is at least 42 inches in overall length, with the far end mounted at least 54 inches from the rear wall, and with the closer end no more than 12 inches from the rear wall. Standards §§ 213.3.2, 604.5.1.

ii. Men's

(1) No accessible mirror is provided. Provide at least one mirror such that, if it is mounted above a lavatory or countertop, it is mounted with the bottom edge of the reflecting surface no more than 40 inches high; or, if it is not mounted above a lavatory or countertop, it is mounted with the bottom edge of the reflecting surface no more than 35 inches high. Standards §§ 213.2, 603.3.

(2) The side grab bar at the toilet is mounted with the far end 49 inches from the rear wall. Provide a side grab bar that is at least 42 inches in overall length, with the far end mounted at least 54 inches from the rear wall, and with the closer end no more than 12 inches from the rear wall. Standards §§ 213.3.2, 604.5.1.

(3) No rear grab bar provided at the toilet. Provide a rear grab bar that is at least 36 inches long (except where wall space does not permit it due to the location of a recessed fixture, in which case the grab bar may be 24 inches long), extending 12 inches from the toilet centerline on one side and 24 inches on the other side (except where an administrative authority requires flush controls to be located in a position that conflicts with the location of the rear grab bar, in which case the bar may be split or shifted to the open side); mounted horizontally between 33 and 36 inches high to the top of the gripping surface; with a diameter between 1¼ and 2 inches (or, if the grab bar is not circular, a perimeter between 4 and 4¾ inches and cross-section dimensions of no more than 2 inches); with 1½ inches between the grab bar and the wall; and at least 1½ inches between the grab bar and any object beside or below it and at least 12 inches between the grab bar and any object above it. Grab bars shall also comply with requirements for surface hazards, fittings, and structural strength. Standards §§ 213.3.2, 604.5.2, 609.

c. Drinking Fountains

i. 1st floor by designated accessible toilet rooms

(1) The drinking fountain spout is 37 inches above the finished floor, and the water flow is 3 inches high. Provide 50% of all drinking fountains on each floor or exterior site with a spout outlet between 38 and 43 inches high and 50% of all drinking fountains on each floor or exterior site with a spout outlet no more than 36 inches high that otherwise complies with the Standards. At least one of each type shall be provided. Provide a drinking fountain that

directs the water flow in a trajectory that is at least 4 inches high and no more than 5 inches from the front edge of the unit. Standards §§ 211, 602.4, 602.6, 602.7.

(2) The drinking fountain protrudes into the main walkway and is not detectable to a blind person using a cane. Unless protected by a cane detectable barrier, objects with their leading edges between 27 inches and 80 inches high shall not protrude into circulation paths more than 4 inches for wall-mounted elements, or 12 inches for free standing post- or pylon-mounted elements. Protruding objects (and cane-detectable barriers) shall not reduce the clear width of accessible routes or maneuvering spaces below minimum requirements. Standards §§ 206, 307.

d. Toilet Rooms, 3rd floor

i. Women's

(1) The pressure required to open the door is 15 pounds. Provide a door that requires no more than 5 pounds of force to open (not including the initial force needed to overcome inertia, retracting bolts, etc.). Standards §§ 206.5, 404.2.9.

ii. Men's

(1) The pressure required to open the door is 15 pounds. Provide a door that requires no more than 5 pounds of force to open (not including the initial force needed to overcome inertia, retracting bolts, etc.). Standards §§ 206.5, 404.2.9.

(2) No accessible mirror is provided. Provide at least one mirror such that, if it is mounted above a lavatory or countertop, it is mounted with the bottom edge of the reflecting surface no more than 40 inches high; or, if it is not mounted above a lavatory or countertop, it is mounted with the bottom edge of the reflecting surface no more than 35 inches high. Standards §§ 213.2, 603.3.

e. Offices – The pressure required to open the door to the County Recorder's Office is 9 pounds. Provide a door that requires no more than 5 pounds of force to open (not including the initial force needed to overcome inertia, retracting bolts, etc.). Standards §§ 206.5, 404.2.9.

f. Toilet Rooms, 5th Floor

i. Men's

(1) The pressure required to open the door is 15 pounds. Provide a door that requires no more than 5 pounds of force to open (not including the initial force needed to overcome inertia, retracting

bolts, etc.). Standards §§ 206.5, 404.2.9.

(2) No accessible mirror is provided. Provide at least one mirror such that, if it is mounted above a lavatory or countertop, it is mounted with the bottom edge of the reflecting surface no more than 40 inches high; or, if it is not mounted above a lavatory or countertop, it is mounted with the bottom edge of the reflecting surface no more than 35 inches high. Standards §§ 213.2, 603.3.

ii. Women's

(1) The pressure required to open the door is 10 pounds. Provide a door that requires no more than 5 pounds of force to open (not including the initial force needed to overcome inertia, retracting bolts, etc.). Standards §§ 206.5, 404.2.9.

(2) No accessible mirror is provided. Provide at least one mirror such that, if it is mounted above a lavatory or countertop, it is mounted with the bottom edge of the reflecting surface no more than 40 inches high; or, if it is not mounted above a lavatory or countertop, it is mounted with the bottom edge of the reflecting surface no more than 35 inches high. Standards §§ 213.2, 603.3.

(3) The toilet flush control is on the closed side. Provide a flush control mounted on the "open" side of the toilet's clear floor space, between 15 and 48 inches high, and requiring a maximum of 5 pounds of force to operate; or provide an automatic flush device. Standards §§ 213.3.2, 309.4, 604.6.

g. Toilet Rooms, 2nd floor, next to Courtroom 4

i. Women's

(1) The pressure required to open the door is 10 pounds. Provide a door that requires no more than 5 pounds of force to open (not including the initial force needed to overcome inertia, retracting bolts, etc.). Standards §§ 206.5, 404.2.9.

(2) The top of the toilet seat is 20 inches above the finished floor. Provide a toilet with the top of the seat 17 to 19 inches high. The seat shall not be sprung to return to a lifted position. Standards §§ 213.3.2, 604.4.

ii. Men's

(1) The pressure required to open the door is 10 pounds. Provide a door that requires no more than 5 pounds of force to open (not including the initial force needed to overcome inertia, retracting

bolts, etc.). Standards §§ 206.5, 404.2.9.

(2) The top of the toilet seat is 20 inches above the finished floor. Provide a toilet with the top of the seat 17 to 19 inches high. The seat shall not be sprung to return to a lifted position. Standards §§ 213.3.2, 604.4.

h. Toilet Rooms, basement level, near Jury Assembly Room

i. Men's

(1) The pressure required to open the door is 15 pounds. Provide a door that requires no more than 5 pounds of force to open (not including the initial force needed to overcome inertia, retracting bolts, etc.). Standards §§ 206.5, 404.2.9.

ii. Women's

(1) The pressure required to open the door is 12 pounds. Provide a door that requires no more than 5 pounds of force to open (not including the initial force needed to overcome inertia, retracting bolts, etc.). Standards §§ 206.5, 404.2.9.

i. Jury Assembly Room, basement level

i. The pressure required to open the door is 14 pounds. Provide a door that requires no more than 5 pounds of force to open (not including the initial force needed to overcome inertia, retracting bolts, etc.). Standards §§ 206.5, 404.2.9.

ii. No signage informing the public of the availability of an assistive listening system is provided. Provide accessible signage indicating the availability of the assistive listening system. Standards §§ 216.10, 219.2, 703.5, 703.7.2.4.

j. Jury Deliberation Room, 214

i. Accessible Route

(1) The door has knob hardware. Provide a door with hardware, mounted between 34 and 48 inches high, that is operable with one hand and does not require tight grasping, pinching, or twisting of the wrist and requires no more than 5 pounds of force to operate. Lever-operated mechanisms, push-type mechanisms, and U-shaped handles are acceptable designs. Standards §§ 206.4, 206.5, 309.4, 404.2.7.

(2) No assistive listening system available. Provide an assistive

listening system. Provide receivers complying with the Standards in accordance with the following chart, and provide signage indicating their availability. Standards §§ 216.10, 219, 703.5, 703.7.2.4, 706.

Seating Capacity of Assembly Area	Number of Required Receivers	Required Receivers Required to be Hearing-Aid Compatible*
50 or less	2	2*
51 to 200	2, plus 1 per 25 seats over 50	2*
201 to 500	2, plus 1 per 25 seats over 50	1 per 4 receivers*
501 to 1000	20, plus 1 per 33 seats over 500	1 per 4 receivers*
1001 to 2000	35, plus 1 per 50 seats over 1000	1 per 4 receivers*
2001 and over	55, plus 1 per 100 seats over 2000	1 per 4 receivers*
* unless all seats are served by an induction loop system, in which case no receivers are required to be hearing aid compatible.		

ii. Toilet Rooms - The men's and women's single user toilet rooms contain a number of inaccessible elements and are not accessible to people with disabilities. Provide an accessible toilet room such that all of the room's elements, including signage, door, door hardware, clear floor space, toilet, stall size and arrangement (if any), urinal (if provided), grab bars, lavatory, mirror, controls, and dispensers, comply with the Standards. Standards §§ 204, 205, 206, 213, 216, 225, 301.1, 401.1, 601.1, 703, 811.

iii. Drinking Fountain (currently not working)

(1) The drinking fountain spout is 39 inches above the finished floor. Provide 50% of all drinking fountains on each floor or exterior site with a spout outlet between 38 and 43 inches high and 50% of all drinking fountains on each floor or exterior site with a spout outlet no more than 36 inches high that otherwise complies with the Standards. At least one of each type shall be provided. Standards §§ 211, 602.4, 602.7.

(2) The drinking fountain hardware requires twisting to operate. Provide a drinking fountain with controls that are operable with one hand, that require 5 pounds of force or less to operate, and that can be operated without tight grasping, pinching, or twisting of the wrist. Standards §§ 211, 309.4, 602.3.

(3) No knee space is provided at the drinking fountain. Provide a drinking fountain with a clear floor space of at least 30 inches by 48 inches (36 inches by 48 inches if the unit is in an alcove more than 24 inches deep) positioned for a forward approach and centered on the unit. Knee clearance shall be at least 11 inches

deep at 9 inches high and at least 8 inches deep at 27 inches high. Standards §§ 211, 305, 306, 602.2.

k. Jury Deliberation Room (no room identifier)

i. The pressure required to open the door is 10 pounds. Provide a door that requires no more than 5 pounds of force to open (not including the initial force needed to overcome inertia, retracting bolts, etc.). Standards §§ 206.5, 404.2.9.

l. Jury Room 237

i. The toilet room does not have accessible signage. Provide a toilet room sign with raised and Braille characters. Tactile signs shall be mounted on the wall adjacent to the latch side of the door or the nearest adjacent wall (except that signs can be mounted on the push side of doors with closers and without hold-open devices); mounted 48 inches minimum from floor to the baseline of the lowest tactile character and 60 inches maximum from the floor to the baseline of the highest tactile character; and located so that a clear floor space of at least 18 inches by 18 inches, centered on the tactile characters, is provided beyond the arc of any door's swing between the closed and 45 degrees open positions. If not all toilet rooms are accessible, provide signage with the International Symbol of Accessibility at all accessible toilet rooms. Standards §§ 216.2, 703.

m. Courtrooms 2 & 7

i. The pressure required to open the 1st door is 8 pounds and the pressure required to open the 2nd door is 10 pounds. Provide a door that requires no more than 5 pounds of force to open (not including the initial force needed to overcome inertia, retracting bolts, etc.). Standards §§ 206.5, 404.2.9.

ii. No designated wheelchair seating areas are provided in the court room. Provide the number of wheelchair spaces shown in the following chart. Standards § 221.2. **Dimensions.** Each wheelchair space shall have minimum clear ground or floor space of 36 inches wide by 48 inches deep when approachable from the front or rear, or 36 inches wide by 60 inches deep when approachable only from the side (spaces need only be 33 inches wide if adjacent to another wheelchair space). The ground or floor at all wheelchair spaces shall be level, firm, stable and slip resistant; wheelchair spaces shall not overlap circulation paths; and at least one companion seat shall be provided next to each wheelchair space. Wheelchair spaces and companion seats shall not be located on (or obstructed by) temporary platforms or other movable structures. 28 C.F.R. § 35.151(g); Standards §§ 221.2, 221.3, 802.1. **Integration / Lines of Sight.** Wheelchair spaces shall be an integral part of the seating plan and shall provide spectators with choices of seating locations and viewing angles that are substantially equivalent to, or better than, the choices of seating locations and viewing angles available to all other spectators. In

stadiums where spectators can be expected to stand during the show or event (for example, football, baseball, basketball games, or rock concerts), the wheelchair spaces shall provide lines of sight over standing spectators. Standards §§ 221.2, 802.2. **Dispersion.** When the seating capacity exceeds 300, wheelchair spaces and companion seats shall be horizontally and vertically dispersed. Wheelchair spaces and companion seats shall be dispersed to all levels that include seating served by an accessible route. Wheelchair spaces and companion seats shall be dispersed **vertically** at varying distances from the screen, performance area, or playing field, including locations in each balcony or mezzanine located on an accessible route. Assembly areas that (1) have seating encircling, in whole or in part, a field of play or performance area, and (2) are required to **horizontally** disperse wheelchair spaces and companion seats, shall disperse wheelchair spaces and companion seats around that field of play or performance area. 28 C.F.R. § 35.151(g); Standards § 221.2.3. **Companion Seats.** In row seating, companion seats shall be located to provide shoulder alignment with adjacent wheelchair spaces. The shoulder alignment point of the wheelchair space shall be measured 36 inches from the front of the wheelchair space. The floor surface of the companion seat shall be the same elevation as the floor surface of the wheelchair space. Companion seats shall be equivalent in size, quality, comfort, and amenities to the seating in the immediate area. Companion seats may be movable. Standards § 221.3. **Aisle Seats.** At least 5% of the total number of aisle seats shall provide folding or retractable armrests on the aisle side of the seat, shall be identified by a sign or marker, and shall be the aisle seats closest to accessible routes. Standards §§ 221.4, 802.4.

iii. No signage informing the public of the availability of an assistive listening system is provided. Provide accessible signage indicating the availability of the assistive listening system. Standards §§ 216.10, 219.2, 703.5, 703.7.2.4.

n. Courtroom 4

i. The pressure required to open the 1st and 2nd doors is 10 pounds. Provide a door that requires no more than 5 pounds of force to open (not including the initial force needed to overcome inertia, retracting bolts, etc.). Standards §§ 206.5, 404.2.9.

ii. No signage informing the public of the availability of an assistive listening system is provided. Provide accessible signage indicating the availability of the assistive listening system. Standards §§ 216.10, 219.2, 703.5, 703.7.2.4.

iii. The path of travel to the jury box is less than 36 inches wide. Provide to each area, feature, or element described an accessible route with a minimum clear width of 36 inches, except that the width may decrease to 32 inches for a depth of no more than 24 inches. Standards §§ 206, 403.5.1.

2. Within 9 months of entry of this Consent Decree, the County will complete the following modifications to the **Public Health Department, Healthy Moms Program**, located at 2910 H Street in Eureka.

   a. Toilet Room in Child Care Center (Single user)

      i. The toilet flush control is on the closed side. Provide a flush control mounted on the "open" side of the toilet's clear floor space, between 15 and 48 inches high, and requiring a maximum of 5 pounds of force to operate; or provide an automatic flush device. Standards §§ 213.3.2, 309.4, 604.6.

      ii. No grab bars are provided at the toilet. Provide a rear grab bar that is at least 36 inches long (except where wall space does not permit it due to the location of a recessed fixture, in which case the grab bar may be 24 inches long), extending 12 inches from the toilet centerline on one side and 24 inches on the other side (except where an administrative authority requires flush controls to be located in a position that conflicts with the location of the rear grab bar, in which case the bar may be split or shifted to the open side). Provide a side grab bar that is at least 42 inches in overall length, with the far end mounted at least 54 inches from the rear wall and the closer end no more than 12 inches from the rear wall. Grab bars shall be mounted between 33 and 36 inches high to the top of the gripping surface; with a diameter between 1¼ and 2 inches (or, if the grab bar is not circular, a perimeter between 4 and 4¾ inches and cross-section dimensions of no more than 2 inches); with 1½ inches between the grab bar and the wall; and at least 1½ inches between the grab bar and any object projecting beside or below it and at least 12 inches between the grab bar and any object projecting above it. Grab bars shall also comply with requirements for surface hazards, fittings, and structural strength. Standards §§ 213.3.2, 604.5, 609.

3. Within 33 months of entry of this Consent Decree, the County will complete the following modifications to the **Juvenile Hall**, located at 2002 Harrison Avenue in Eureka.

   a. Room signs are not mounted 60 inches above the finished floor on the wall adjacent to the latch side of the door. Provide permanent room signage meeting the requirements of the Standards for raised characters, visual characters, and pictograms; accompanied by Grade 2 Braille. Tactile signs shall be mounted between 48 and 60 inches high on the wall adjacent to the latch side of the door or on the nearest adjacent wall (except that signs can be mounted on the inactive leaf of a double door or on the push side of doors with closers and without hold-open devices); and shall be located so that a clear floor space of at least 18 inches by 18 inches, centered on the tactile characters, is provided beyond the arc of any door's swing between the closed and 45 degrees open positions. Standards §§ 216, 703.

   b. The County shall provide the following accessible routes throughout the facility:

i. No accessible route is provided to the basement level of the facility. Establish a procedure for providing access to programs in upper and lower levels of the facility, or provide ramps, platform lifts, or elevators in compliance with the Standards. Procedures shall not include lifting or carrying persons with mobility impairments or require them to traverse unnecessary or extreme distances. Standards §§ 206.2, 405, 407, 408, 410.

ii. The top and bottom handrail extensions at the stairs are not parallel to the floor. Provide handrails on both sides of the stairs such that the inside handrail on switchbacks or doglegs is continuous. Handrails shall extend at least 12 inches beyond the top riser and at least the depth of one tread beyond the bottom riser; there shall be a clear space of at least 1½ inches between the handrails and the wall; handrail gripping surfaces shall be continuous and shall not be obstructed along their tops or sides; handrails shall have a diameter between 1¼ and 2 inches or a perimeter between 4 inches and 6¼ inches and a cross section of no more than 2¼ inches; handrails shall be mounted between 34 and 38 inches above stair nosings; the ends of the handrails shall be returned to a wall, a guard, or the landing surface; and the handrails shall not rotate within their fittings and shall be free of sharp or abrasive elements. Standards §§ 206, 210, 504, 505.

c. Telephones

i. Adler Wing. The telephone has no volume control. Provide accessible telephones in accordance with the following chart with clear floor space of at least 30 inches by 48 inches that allows either a forward or parallel approach such that bases, enclosures, and fixed seats do not impede approaches to the telephone. All operable parts of the telephone shall be mounted between 15 and 48 inches high; volume control shall be provided; the cord shall be at least 29 inches long from the telephone to the handset; and there shall be a picture of a telephone handset with radiating sound waves. Standards §§ 217, 305, 309, 703.7.2.3, 704.

Telephones on Floor, Level, or Exterior Site	Number of Required Accessible Telephones
1 or more single units	1 per floor, level, or exterior site
1 bank of 2 or more	1 per floor, level, or exterior site
2 or more banks	1 per bank

d. Drinking Fountain

i. The drinking fountains protrude into the entrance walkway and are not detectable to a blind person using a cane. Unless protected by a cane detectable barrier, objects with their leading edges between 27 inches and 80 inches high shall not protrude into circulation paths more than 4 inches for wall-mounted elements, or 12 inches for free standing post- or pylon-

mounted elements. Protruding objects (and cane-detectable barriers) shall not reduce the clear width of accessible routes or maneuvering spaces below minimum requirements. Standards §§ 206, 307.

ii. No drinking fountain is provided in the Processing area for people who have difficulty bending or stooping. Provide 50% of all drinking fountains on each floor or exterior site with a spout outlet between 38 and 43 inches high and 50% of all drinking fountains on each floor or exterior site with a spout outlet no more than 36 inches high that otherwise complies with the Standards. At least one of each type shall be provided. Standards §§ 211, 602.4, 602.7.

e. Exam Room

i. The door clear opening width is 29 inches. Provide a door with a clear opening at least 32 inches wide, measured between the face of the door and the opposite stop, when the door is open 90 degrees. Standards §§ 206.4, 206.5, 404.2.3.

ii. The door has 7 inches of clear floor space on the latch side in the pull direction. Provide maneuvering clearance at the door that complies with the following chart. Standards §§ 206.5, 404.2.4.1.

Approach Direction	**Minimum Maneuvering Clearance Perpendicular to Doorway**	**Minimum Maneuvering Clearance Parallel to Doorway (beyond latch side unless noted)**
From front, pull side	60 inches	18 inches
From front, push side	48 inches	0 inches (12 inches if closer and latch are present)
From hinge, pull side	60 inches	36 inches
From hinge, pull side	54 inches	42 inches
From hinge, push side	42 inches (48 inches if closer and latch are present)	22 inches (beyond hinge side)
From latch, pull side	48 inches (54 inches if closer is present)	24 inches
From latch, push side	42 inches (48 inches if closer is present)	24 inches

f. Toilet Rooms

i. Unisex toilet room in Processing

(1) The toilet room sign is not mounted on the wall adjacent to the latch side of the door 60 inches high. Provide a toilet room sign with raised and Braille characters. Tactile signs shall be mounted on the wall adjacent to the latch side of the door or the nearest adjacent wall (except that signs can be mounted on the push side of doors with closers and without hold-open devices); mounted 48

inches minimum from floor to the baseline of the lowest tactile character and 60 inches maximum from the floor to the baseline of the highest tactile character; and located so that a clear floor space of at least 18 inches by 18 inches, centered on the tactile characters, is provided beyond the arc of any door's swing between the closed and 45 degrees open positions. If not all toilet rooms are accessible, provide signage with the International Symbol of Accessibility at all accessible toilet rooms. Standards §§ 216.2, 703.

ii. Adler Wing (Girls)

(1) The toilet room sign is not mounted on the wall adjacent to the latch side of the door 60 inches high. Provide a toilet room sign with raised and Braille characters. Tactile signs shall be mounted on the wall adjacent to the latch side of the door or the nearest adjacent wall (except that signs can be mounted on the push side of doors with closers and without hold-open devices); mounted 48 inches minimum from floor to the baseline of the lowest tactile character and 60 inches maximum from the floor to the baseline of the highest tactile character; and located so that a clear floor space of at least 18 inches by 18 inches, centered on the tactile characters, is provided beyond the arc of any door's swing between the closed and 45 degrees open positions. If not all toilet rooms are accessible, provide signage with the International Symbol of Accessibility at all accessible toilet rooms. Standards §§ 216.2, 703.

(2) The door has an opening width of 29 inches. Provide a door with a clear opening at least 32 inches wide, measured between the face of the door and the opposite stop, when the door is open 90 degrees. Standards §§ 206.4, 206.5, 404.2.3.

(3) The door has knob hardware. Provide a door with hardware, mounted between 34 and 48 inches high, that is operable with one hand and does not require tight grasping, pinching, or twisting of the wrist and requires no more than 5 pounds of force to operate. Lever-operated mechanisms, push-type mechanisms, and U-shaped handles are acceptable designs. Standards §§ 206.4, 206.5, 309.4, 404.2.7.

(4) No accessible mirror is provided. Provide at least one mirror such that, if it is mounted above a lavatory or countertop, it is mounted with the bottom edge of the reflecting surface no more than 40 inches high; or, if it is not mounted above a lavatory or countertop, it is mounted with the bottom edge of the reflecting surface no more than 35 inches high. Standards §§ 213.2, 603.3.

(5) The lavatory apron provides 26 inches of knee clearance. Provide

a lavatory with the top of the rim or counter 34 inches high or less; knee clearance at least 30 inches wide, between 9 inches and 27 inches high, extending between 11 and 25 inches deep at 9 inches high, and extending at least 8 inches deep at 27 inches high; and toe clearance at least 30 inches wide and 9 inches high, and extending between 17 and 25 inches deep under the lavatory. Standards §§ 213.3.4, 306, 606.2, 606.3.

(6) No accessible toilet compartment is provided. Provide an accessible toilet compartment at least 60 inches wide and at least 59 inches deep (or at least 56 inches deep with a wall-mounted toilet) such that all of the compartment's elements, including door, door hardware, toilet, size and arrangement, toe clearances, grab bars, controls, and dispensers, comply with the Standards. Standards §§ 213.3.1, 301.1, 404, 604, 604.8.1, 609.

iii. Redwood Wing (Boys)

(1) The toilet room sign is not mounted on the wall adjacent to the latch side of the door 60 inches high. Provide a toilet room sign with raised and Braille characters. Tactile signs shall be mounted on the wall adjacent to the latch side of the door or the nearest adjacent wall (except that signs can be mounted on the push side of doors with closers and without hold-open devices); mounted 48 inches minimum from floor to the baseline of the lowest tactile character and 60 inches maximum from the floor to the baseline of the highest tactile character; and located so that a clear floor space of at least 18 inches by 18 inches, centered on the tactile characters, is provided beyond the arc of any door's swing between the closed and 45 degrees open positions. If not all toilet rooms are accessible, provide signage with the International Symbol of Accessibility at all accessible toilet rooms. Standards §§ 216.2, 703.

(2) The door has an opening width of 29 inches. Provide a door with a clear opening at least 32 inches wide, measured between the face of the door and the opposite stop, when the door is open 90 degrees. Standards §§ 206.4, 206.5, 404.2.3.

(3) The door has knob hardware. Provide a door with hardware, mounted between 34 and 48 inches high, that is operable with one hand and does not require tight grasping, pinching, or twisting of the wrist and requires no more than 5 pounds of force to operate. Lever-operated mechanisms, push-type mechanisms, and U-shaped handles are acceptable designs. Standards §§ 206.4, 206.5, 309.4, 404.2.7.

(4) No accessible mirror is provided. Provide at least one mirror such that, if it is mounted above a lavatory or countertop, it is mounted

with the bottom edge of the reflecting surface no more than 40 inches high; or, if it is not mounted above a lavatory or countertop, it is mounted with the bottom edge of the reflecting surface no more than 35 inches high. Standards §§ 213.2, 603.3.

(5) The soap dispenser controls are mounted 50 inches above the finished floor. Operable parts and controls of this element shall be between 15 and 48 inches high and accompanied by clear floor space of 30 by 48 inches that allows a forward or parallel approach by a person using a wheelchair. Standards §§ 205.1, 305, 308.2, 308.3, 309.

(6) The lavatory has insufficient knee and toe clearance. Provide a lavatory with the top of the rim or counter 34 inches high or less; knee clearance at least 30 inches wide, between 9 inches and 27 inches high, extending between 11 and 25 inches deep at 9 inches high, and extending at least 8 inches deep at 27 inches high; and toe clearance at least 30 inches wide and 9 inches high, and extending between 17 and 25 inches deep under the lavatory. Standards §§ 213.3.4, 306, 606.2, 606.3.

(7) The lavatory has twist type hardware. Provide a lavatory with a faucet that can be operated with no more than 5 pounds of force and can be used with one hand and without tight grasping, pinching, or twisting of the wrist (lever-operated, push-type, and electronically controlled mechanisms are examples of acceptable designs). Hand-operated metering faucets shall remain open for at least 10 seconds. Standards §§ 213.3.4, 309.4, 606.4.

(8) No accessible toilet compartment is provided. Provide an accessible toilet compartment at least 60 inches wide and at least 59 inches deep (or at least 56 inches deep with a wall-mounted toilet) such that all of the compartment's elements, including door, door hardware, toilet, size and arrangement, toe clearances, grab bars, controls, and dispensers, comply with the Standards. Standards §§ 213.3.1, 301.1, 404, 604, 604.8.1, 609.

g. Shower Stalls

i. Processing

(1) No hand-held shower spray unit is provided and the shower head is higher than 48 inches above the finished floor. Provide a shower spray unit with a hose at least 59 inches long that can be used both as a fixed shower head and as a hand-held shower, with an on/off control with a non-positive shutoff, that delivers water no hotter than 120 degrees. A fixed shower head mounted at 48 inches above the shower floor may be used in lieu of a hand-held shower head. Standards §§ 213.3.6, 608.6.

ii. Adler Wing (Girls)

(1) The shower has a number of inaccessible features and is not accessible to people with mobility impairments. Provide a transfer shower that is 36 inches by 36 inches clear inside with a clearance outside of 36 inches wide by 48 inch long, measured from the control wall; with a threshold that is no higher than ½ inch and beveled, rounded, or vertical; with a folding or non-folding rectangular or L-shaped seat mounted on the wall opposite the controls; with grab bars across the control wall and across the back wall to a point 18 inches from the control wall; with controls, faucets, and shower spray unit mounted on the wall opposite the seat between 38 and 48 inches above the floor and located 15 inches maximum from the centerline of the seat toward the shower opening…OR…provide a roll-in shower that is at least 30 inches wide by 60 deep with a minimum 30 inch wide by 60 inch long clear floor space at the face of the shower; with a threshold that is no higher than ¼ inch vertically, or between ¼ inch and no higher than ½ inch and beveled; where an optional seat is provided grab bars shall be on the back wall and the side wall opposite the seat and shall not be provided above the seat; where an optional seat is not provided grab bars shall be on three walls, installed 6 inches maximum from adjacent walls; where an optional seat is provided the controls, faucets, and shower spray unit shall be installed on the back wall adjacent to the seat wall 27 inches maximum from the seat wall; where an optional seat is not provided the controls, faucets, and shower spray unit may be installed on any wall of the shower. Transfer and roll-in shower controls, faucets, and shower spray unit shall be located above the grab bar but no higher than 48 inches above the floor, and operable with no more than 5 pounds of force, with one hand, and without tight grasping, pinching, or twisting of the wrist; shower enclosures provided shall not obstruct controls, faucets, spray units, and transfer between wheelchairs and optional shower seats. Standards §§ 213.3.6, 608, 609, 610.

iii. Adler Wing (Boys)

(1) The shower has a number of inaccessible features and is not accessible to people with mobility impairments. Provide a transfer shower that is 36 inches by 36 inches clear inside with a clearance outside of 36 inches wide by 48 inch long, measured from the control wall; with a threshold that is no higher than ½ inch and beveled, rounded, or vertical; with a folding or non-folding rectangular or L-shaped seat mounted on the wall opposite the controls; with grab bars across the control wall and across the back wall to a point 18 inches from the control wall; with controls, faucets, and shower spray unit mounted on the wall opposite the seat between 38 and 48 inches above the floor and located 15

inches maximum from the centerline of the seat toward the shower opening…OR…provide a roll-in shower that is at least 30 inches wide by 60 deep with a minimum 30 inch wide by 60 inch long clear floor space at the face of the shower; with a threshold that is no higher than ¼ inch vertically, or between ¼ inch and no higher than ½ inch and beveled; where an optional seat is provided grab bars shall be on the back wall and the side wall opposite the seat and shall not be provided above the seat; where an optional seat is not provided grab bars shall be on three walls, installed 6 inches maximum from adjacent walls; where an optional seat is provided the controls, faucets, and shower spray unit shall be installed on the back wall adjacent to the seat wall 27 inches maximum from the seat wall; where an optional seat is not provided the controls, faucets, and shower spray unit may be installed on any wall of the shower. Transfer and roll-in shower controls, faucets, and shower spray unit shall be located above the grab bar but no higher than 48 inches above the floor, and operable with no more than 5 pounds of force, with one hand, and without tight grasping, pinching, or twisting of the wrist; shower enclosures provided shall not obstruct controls, faucets, spray units, and transfer between wheelchairs and optional shower seats. Standards §§ 213.3.6, 608, 609, 610.

h. No accessible lavatory / toilet combination provided in any of the 26 cells. Provide mobility features for a minimum of 3%, but no fewer than one of the total number of cells in the facility. Cells with mobility features much be provided for each classification level and special housing area, such as administrative and disciplinary segregation and medical isolation. Provide mobility features for at least one of each type of special holding or housing cell, such as a cell serving a particular courtroom. For cells required to have mobility features, provide the following: turning space complying with § 304; where benches are provided, at least one bench complying with § 903; where beds are provided, a bed with clear floor space complying with §305 parallel to at least one side of the bed; where provided, at least one water closet, one lavatory, and one bathtub or shower complying with the applicable requirements of §§ 603 through 610. In cells and dormitories having more than 25 beds, provide clear floor space that complies with § 807.2.3 for a minimum of 5% of the beds. 28 C.F.R. § 35.151(k). Standards §§ 232, 304, 305, 603, 604, 606, 607, 608, 609, 610, 807.2, 903.

4. Within 9 months of entry of this Consent Decree, the County will complete the following modifications to the **Department of Health and Human Services**, located at 507 F Street in Eureka.

a. Toilet Rooms

i. 5th Floor

(1) Men's

(a) The pressure required to open the door is 9 pounds.

Provide a door that requires no more than 5 pounds of force to open (not including the initial force needed to overcome inertia, retracting bolts, etc.). Standards §§ 206.5, 404.2.9.

(b) The toilet room door swings into the required clear floor space at the lavatory. No door shall swing into the required clear floor space or clearance at any accessible fixture (*e.g.*, toilet, urinal, lavatory). Standards §§ 213.2, 603.2.3.

(c) No accessible coat hook is provided. Provide a coat hook or towel hook between 15 and 48 inches high accompanied by clear floor space of 30 by 48 inches. Standards §§ 213.3.7, 305, 308, 603.4.

(d) The paper towel dispenser protrudes into the walkway and is not detectable to a blind person using a cane. Unless protected by a cane detectable barrier, objects with their leading edges between 27 inches and 80 inches high shall not protrude into circulation paths more than 4 inches for wall-mounted elements, or 12 inches for free standing post- or pylon-mounted elements. Protruding objects (and cane-detectable barriers) shall not reduce the clear width of accessible routes or maneuvering spaces below minimum requirements. Standards §§ 206, 307.

(2) Women's

(a) The pressure required to open the door is 9 pounds. Provide a door that requires no more than 5 pounds of force to open (not including the initial force needed to overcome inertia, retracting bolts, etc.). Standards §§ 206.5, 404.2.9.

(b) No accessible coat hook is provided. Provide a coat hook or towel hook between 15 and 48 inches high accompanied by clear floor space of 30 by 48 inches. Standards §§ 213.3.7, 305, 308, 603.4.

(c) The paper towel dispenser protrudes into the walkway and is not detectable to a blind person using a cane. Unless protected by a cane detectable barrier, objects with their leading edges between 27 inches and 80 inches high shall not protrude into circulation paths more than 4 inches for wall-mounted elements, or 12 inches for free standing post- or pylon-mounted elements. Protruding objects (and cane-detectable barriers) shall not reduce the clear width of accessible routes or maneuvering spaces below minimum requirements. Standards §§ 206, 307.

ii. Mezzanine

(1) Men's

(a) The pressure required to open the door is 10 pounds. Provide a door that requires no more than 5 pounds of force to open (not including the initial force needed to overcome inertia, retracting bolts, etc.). Standards §§ 206.5, 404.2.9.

(b) No accessible coat hook is provided. Provide a coat hook or towel hook between 15 and 48 inches high accompanied by clear floor space of 30 by 48 inches. Standards §§ 213.3.7, 305, 308, 603.4.

(c) The paper towel dispenser protrudes into the walkway and is not detectable to a blind person using a cane. Unless protected by a cane detectable barrier, objects with their leading edges between 27 inches and 80 inches high shall not protrude into circulation paths more than 4 inches for wall-mounted elements, or 12 inches for free standing post- or pylon-mounted elements. Protruding objects (and cane-detectable barriers) shall not reduce the clear width of accessible routes or maneuvering spaces below minimum requirements. Standards §§ 206, 307.

(2) Women's

(a) The pressure required to open the door is 10 pounds. Provide a door that requires no more than 5 pounds of force to open (not including the initial force needed to overcome inertia, retracting bolts, etc.). Standards §§ 206.5, 404.2.9.

(b) No accessible coat hook is provided. Provide a coat hook or towel hook between 15 and 48 inches high accompanied by clear floor space of 30 by 48 inches. Standards §§ 213.3.7, 305, 308, 603.4.

(c) The paper towel dispenser protrudes into the walkway and is not detectable to a blind person using a cane. Unless protected by a cane detectable barrier, objects with their leading edges between 27 inches and 80 inches high shall not protrude into circulation paths more than 4 inches for wall-mounted elements, or 12 inches for free standing post- or pylon-mounted elements. Protruding objects (and cane-detectable barriers) shall not reduce the clear width of accessible routes or maneuvering spaces below minimum requirements. Standards §§ 206, 307.

b. Elevator

i. The elevator emergency communications require voice communication. Provide a two-way communication system that provides both audible and visible signals, with operable parts between 15 and 48 inches high, and identified by raised characters and Braille adjacent to the device. If the system uses a handset, the cord shall be at least 29 inches long. If the system is located in a closed compartment, the compartment door hardware shall operate without tight grasping, pinching or twisting of the wrist. Standards §§ 206.6, 308, 309.4, 407.4.9, 703.2, 708.

5. Within 21 months of entry of this Consent Decree, the County will complete the following modifications to the **Humboldt County Fairgrounds**, located at 1250 5th Street in Ferndale.

a. RV Toilet Rooms and Turf Club

i. RV

(1) Toilet Rooms

(a) Women's

(i) No accessible route is provided to the women's toilet room. To each area, feature, or element described, provide at least one accessible route that coincides with or is located in the same area as general circulation paths. The accessible route must have a minimum clear width of 36 inches (except that it may narrow to no less than 32 inches for a length of no more than 24 inches), or a minimum clear width of 42 inches if there is a U-turn around an obstruction less than 48 inches wide; have passing spaces at least every 200 feet; have a minimum clear headroom of 80 inches; have a surface that is firm, stable, and slip resistant; have, in the absence of a curb ramp, ramp, elevator, or platform lift, no level changes in excess of ½ inch vertically; have no level changes greater than ¼ inch vertically unless they are beveled with a slope no greater than 50%; and have a running slope no greater than 5% (or have been constructed as a fully accessible ramp) and a cross slope no greater than 2.08%. Standards §§ 206, 301.1, 401.1.

(ii) The lavatory hot water pipes are not insulated or otherwise configured to protect against contact. Provide water supply and drain pipes insulated or otherwise configured to protect against contact. There shall be no sharp or abrasive surfaces

underneath the lavatory or sink. Standards §§ 213.3.4, 606.5.

(iii) No accessible coat hook is provided. Provide a coat hook or towel hook between 15 and 48 inches high accompanied by clear floor space of 30 by 48 inches. Standards §§ 213.3.7, 305, 308, 603.4.

(b) Men's

(i) No accessible route is provided to the men's toilet room. To each area, feature, or element described, provide at least one accessible route that coincides with or is located in the same area as general circulation paths. The accessible route must have a minimum clear width of 36 inches (except that it may narrow to no less than 32 inches for a length of no more than 24 inches), or a minimum clear width of 42 inches if there is a U-turn around an obstruction less than 48 inches wide; have passing spaces at least every 200 feet; have a minimum clear headroom of 80 inches; have a surface that is firm, stable, and slip resistant; have, in the absence of a curb ramp, ramp, elevator, or platform lift, no level changes in excess of ½ inch vertically; have no level changes greater than ¼ inch vertically unless they are beveled with a slope no greater than 50%; and have a running slope no greater than 5% (or have been constructed as a fully accessible ramp) and a cross slope no greater than 2.08%. Standards §§ 206, 301.1, 401.1.

(ii) The lavatory pipes are not insulated or otherwise configured to protect against contact. Provide water supply and drain pipes insulated or otherwise configured to protect against contact. There shall be no sharp or abrasive surfaces underneath the lavatory or sink. Standards §§ 213.3.4, 606.5.

(2) Showers

(a) Women's

(i) The roll-in shower controls are not on the back wall and the shower head is fixed higher than 48 inches. Provide a transfer shower that is 36 inches by 36 inches clear inside with a clearance outside of 36 inches wide by 48 inch long, measured from the control wall; with a threshold that is no higher than

½ inch and beveled, rounded, or vertical; with a folding or non-folding rectangular or L-shaped seat mounted on the wall opposite the controls; with grab bars across the control wall and across the back wall to a point 18 inches from the control wall; with controls, faucets, and shower spray unit mounted on the wall opposite the seat between 38 and 48 inches above the floor and located 15 inches maximum from the centerline of the seat toward the shower opening…OR…provide a roll-in shower that is at least 30 inches wide by 60 deep with a minimum 30 inch wide by 60 inch long clear floor space at the face of the shower; with a threshold that is no higher than ¼ inch vertically, or between ¼ inch and no higher than ½ inch and beveled; where an optional seat is provided grab bars shall be on the back wall and the side wall opposite the seat and shall not be provided above the seat; where an optional seat is not provided grab bars shall be on three walls, installed 6 inches maximum from adjacent walls; where an optional seat is provided the controls, faucets, and shower spray unit shall be installed on the back wall adjacent to the seat wall 27 inches maximum from the seat wall; where an optional seat is not provided the controls, faucets, and shower spray unit may be installed on any wall of the shower. Transfer and roll-in shower controls, faucets, and shower spray unit shall be located above the grab bar but no higher than 48 inches above the floor, and operable with no more than 5 pounds of force, with one hand, and without tight grasping, pinching, or twisting of the wrist; shower enclosures provided shall not obstruct controls, faucets, spray units, and transfer between wheelchairs and optional shower seats. Standards §§ 213.3.6, 608, 609, 610.

(ii) No accessible coat hook is provided. Provide a coat hook or towel hook between 15 and 48 inches high accompanied by clear floor space of 30 by 48 inches. Standards §§ 213.3.7, 305, 308, 603.4.

(b) Men's

(i) The roll-in shower controls are not on the back wall, a curb is present, and the fixed shower head is higher than 48 inches. Provide a transfer shower that is 36 inches by 36 inches clear inside with a clearance outside of 36 inches wide by 48 inch long,

measured from the control wall; with a threshold that is no higher than ½ inch and beveled, rounded, or vertical; with a folding or non-folding rectangular or L-shaped seat mounted on the wall opposite the controls; with grab bars across the control wall and across the back wall to a point 18 inches from the control wall; with controls, faucets, and shower spray unit mounted on the wall opposite the seat between 38 and 48 inches above the floor and located 15 inches maximum from the centerline of the seat toward the shower opening…OR… provide a roll-in shower that is at least 30 inches wide by 60 deep with a minimum 30 inch wide by 60 inch long clear floor space at the face of the shower; with a threshold that is no higher than ¼ inch vertically, or between ¼ inch and no higher than ½ inch and beveled; where an optional seat is provided grab bars shall be on the back wall and the side wall opposite the seat and shall not be provided above the seat; where an optional seat is not provided grab bars shall be on three walls, installed 6 inches maximum from adjacent walls; where an optional seat is provided the controls, faucets, and shower spray unit shall be installed on the back wall adjacent to the seat wall 27 inches maximum from the seat wall; where an optional seat is not provided the controls, faucets, and shower spray unit may be installed on any wall of the shower. Transfer and roll-in shower controls, faucets, and shower spray unit shall be located above the grab bar but no higher than 48 inches above the floor, and operable with no more than 5 pounds of force, with one hand, and without tight grasping, pinching, or twisting of the wrist; shower enclosures provided shall not obstruct controls, faucets, spray units, and transfer between wheelchairs and optional shower seats. Standards §§ 213.3.6, 608, 609, 610.

ii. Turf Club

(1) Toilet Rooms

(a) Men's

(i) No accessible sign is provided. Provide a toilet room sign with raised and Braille characters. Tactile signs shall be mounted on the wall adjacent to the latch side of the door or the nearest adjacent wall (except that signs can be mounted on the push

side of doors with closers and without hold-open devices); mounted 48 inches minimum from floor to the baseline of the lowest tactile character and 60 inches maximum from the floor to the baseline of the highest tactile character; and located so that a clear floor space of at least 18 inches by 18 inches, centered on the tactile characters, is provided beyond the arc of any door's swing between the closed and 45 degrees open positions. If not all toilet rooms are accessible, provide signage with the International Symbol of Accessibility at all accessible toilet rooms. Standards §§ 216.2, 703.

(ii) No accessible mirror is provided. Provide at least one mirror such that, if it is mounted above a lavatory or countertop, it is mounted with the bottom edge of the reflecting surface no more than 40 inches high; or, if it is not mounted above a lavatory or countertop, it is mounted with the bottom edge of the reflecting surface no more than 35 inches high. Standards §§ 213.2, 603.3.

(b) Women's

(i) No accessible sign is provided. Provide permanent room signage meeting the requirements of the Standards for raised characters, visual characters, and pictograms; accompanied by Grade 2 Braille. Tactile signs shall be mounted between 48 and 60 inches high on the wall adjacent to the latch side of the door or on the nearest adjacent wall (except that signs can be mounted on the inactive leaf of a double door or on the push side of doors with closers and without hold-open devices); and shall be located so that a clear floor space of at least 18 inches by 18 inches, centered on the tactile characters, is provided beyond the arc of any door's swing between the closed and 45 degrees open positions. Standards §§ 216, 703.

(ii) No accessible mirror is provided. Provide at least one mirror such that, if it is mounted above a lavatory or countertop, it is mounted with the bottom edge of the reflecting surface no more than 40 inches high; or, if it is not mounted above a lavatory or countertop, it is mounted with the bottom edge of the reflecting surface no more than 35 inches high. Standards §§ 213.2, 603.3.

(iii) The toilet centerline measures 20 inches from the side wall. Provide a toilet with its centerline between 16 and 18 inches from the near side wall. Standards §§ 213.3.2, 604.2.

(2) The door has an opening width of 20 inches. Provide a door with a clear opening at least 32 inches wide, measured between the face of the door and the opposite stop, when the door is open 90 degrees. Standards §§ 206.4, 206.5, 404.2.3.

(3) Telephones

(a) The telephone coin slot is 67 inches high and there is no volume control. Provide accessible telephones in accordance with the following chart with clear floor space of at least 30 inches by 48 inches that allows either a forward or parallel approach such that bases, enclosures, and fixed seats do not impede approaches to the telephone. All operable parts of the telephone shall be mounted between 15 and 48 inches high; volume control shall be provided; the cord shall be at least 29 inches long from the telephone to the handset; and there shall be a picture of a telephone handset with radiating sound waves. Standards §§ 217, 305, 309, 703.7.2.3, 704.

Telephones on Floor, Level, or Exterior Site	Number of Required Accessible Telephones
1 or more single units	1 per floor, level, or exterior site
1 bank of 2 or more	1 per floor, level, or exterior site
2 or more banks	1 per bank

(b) The telephones protrude into the main walkway and are not detectable to a blind person using a cane. Unless protected by a cane detectable barrier, objects with their leading edges between 27 inches and 80 inches high shall not protrude into circulation paths more than 4 inches for wall-mounted elements, or 12 inches for free standing post- or pylon-mounted elements. Protruding objects (and cane-detectable barriers) shall not reduce the clear width of accessible routes or maneuvering spaces below minimum requirements. Standards §§ 206, 307.

b. Belotti Hall (2/9)

i. The double door leafs are each 30 inches wide. Provide a door that has at least one active leaf with at least 32 inches of clear opening width, measured between the face of the door and the opposite stop, when the door is open 90 degrees (or, in the case of automatic doors, the door shall

have 32 inches clear opening provided by all leaves in the open position); that has clear and level maneuvering clearance that complies with § 404.2.4 (unless the door is automatic and either has standby power or remains open with the power off); and that has a threshold not exceeding ½ inch in height (or ¾ inch in height if the threshold is existing or altered) and, if it is greater than ¼ inch in height, beveled with a slope no greater than 50%. All hardware and operating devices shall be operable with one hand and without tight grasping, pinching, or twisting of the wrist; shall require no more than five pounds of force to operate; and shall be mounted between 34 and 48 inches high. All automatic door opener operating devices shall be easy to operate with one hand; shall not require tight grasping, pinching, or twisting of the wrist to operate; shall not require more than 5 pounds of force to operate; shall be mounted between 15 and 48 inches high on an accessible route; and shall be accompanied by a clear floor space that is 48 inches by 30 inches and is beyond the arc of the door's swing. Standards §§ 206.4, 305, 308, 309.4, 404.

ii. No accessible route connects the wheelchair seating areas and the stage. Provide an accessible route directly connecting the wheelchair seating locations with the performance area, and the performance area with ancillary areas used by performers (dressing rooms, locker rooms, etc.) unless specifically exempted by the Standards. Standards §§ 206.2.6, 206.2.3, 401.1.

iii. The ticket windows are obstructed by the bench. At this element, provide clear floor space that contains no changes in level within the required 30 inch by 48 inch space directly in front of the element. Additionally, maneuvering clearances shall comply with § 305, including, if appropriate, providing additional maneuvering space at alcoves. Standards §§ 206, 305.

iv. The telephone has 27 inches of clear floor width, the highest operable part is 65 inches high, and it has no volume control. Provide accessible telephones in accordance with the following chart with clear floor space of at least 30 inches by 48 inches that allows either a forward or parallel approach such that bases, enclosures, and fixed seats do not impede approaches to the telephone. All operable parts of the telephone shall be mounted between 15 and 48 inches high; volume control shall be provided; the cord shall be at least 29 inches long from the telephone to the handset; and there shall be a picture of a telephone handset with radiating sound waves. Standards §§ 217, 305, 309, 703.7.2.3, 704.

Telephones on Floor, Level, or Exterior Site	Number of Required Accessible Telephones
1 or more single units	1 per floor, level, or exterior site
1 bank of 2 or more	1 per floor, level, or exterior site
2 or more banks	1 per bank

v. Toilet Rooms

(1) Men's

(a) The toilet room sign is not mounted on the wall adjacent to the latch side of the door. Provide permanent room signage meeting the requirements of the Standards for raised characters, visual characters, and pictograms; accompanied by Grade 2 Braille. Tactile signs shall be mounted between 48 and 60 inches high on the wall adjacent to the latch side of the door or on the nearest adjacent wall (except that signs can be mounted on the inactive leaf of a double door or on the push side of doors with closers and without hold-open devices); and shall be located so that a clear floor space of at least 18 inches by 18 inches, centered on the tactile characters, is provided beyond the arc of any door's swing between the closed and 45 degrees open positions. Standards §§ 216, 703.

(b) The pressure required to open the door is 15 pounds. Provide a door that requires no more than 5 pounds of force to open (not including the initial force needed to overcome inertia, retracting bolts, etc.). Standards §§ 206.5, 404.2.9.

(c) The air dryer protrudes into the main walkway and is not detectable to a blind person using a cane. Unless protected by a cane detectable barrier, objects with their leading edges between 27 inches and 80 inches high shall not protrude into circulation paths more than 4 inches for wall-mounted elements, or 12 inches for free standing post- or pylon-mounted elements. Protruding objects (and cane-detectable barriers) shall not reduce the clear width of accessible routes or maneuvering spaces below minimum requirements. Standards §§ 206, 307.

(d) No accessible coat hook is provided. Provide a coat hook or towel hook between 15 and 48 inches high accompanied by clear floor space of 30 by 48 inches. Standards §§ 213.3.7, 305, 308, 603.4.

(2) Women's

(a) The toilet room sign is not mounted on the wall adjacent to the latch side of the door. Provide permanent room signage meeting the requirements of the Standards for raised characters, visual characters, and pictograms; accompanied by Grade 2 Braille. Tactile signs shall be mounted between 48 and 60 inches high on the wall adjacent to the latch side of the door or on the nearest adjacent wall (except that

signs can be mounted on the inactive leaf of a double door or on the push side of doors with closers and without hold-open devices); and shall be located so that a clear floor space of at least 18 inches by 18 inches, centered on the tactile characters, is provided beyond the arc of any door's swing between the closed and 45 degrees open positions. Standards §§ 216, 703.

(b) The door pressure required to open the door is 15 pounds. Provide a door that requires no more than 5 pounds of force to open (not including the initial force needed to overcome inertia, retracting bolts, etc.). Standards §§ 206.5, 404.2.9.

(c) The air dryer protrudes into the main walkway and is not detectable to a blind person using a cane. Unless protected by a cane detectable barrier, objects with their leading edges between 27 inches and 80 inches high shall not protrude into circulation paths more than 4 inches for wall-mounted elements, or 12 inches for free standing post- or pylon-mounted elements. Protruding objects (and cane-detectable barriers) shall not reduce the clear width of accessible routes or maneuvering spaces below minimum requirements. Standards §§ 206, 307.

(d) No accessible coat hook is provided. Provide a coat hook or towel hook between 15 and 48 inches high accompanied by clear floor space of 30 by 48 inches. Standards §§ 213.3.7, 305, 308, 603.4.

(e) The bench is 15 inches wide. Provide a bench with a seat at least 42 inches long and between 20 and 24 inches deep that is either affixed to a wall or has a back support that is at least 42 inches long, is no more than 2½ inches horizontally from the rear edge of the seat, and extends from no more than 2 inches to at least 18 inches above the seat. The top of the seat shall be between 17 and 19 inches high and shall provide clear floor space at the end of the bench parallel to the bench's short axis. Standards §§ 222.1, 305, 803.4, 903.

Attachment I: Program Access in Existing Facilities

Please Note: Paragraph 47 of the Consent Decree requires that within nine months of the effective date of this Consent Decree, the County will provide signage as necessary to comply with 28 C.F.R. § 35.163(b), after having surveyed all facilities that are the subject of this Consent Decree for the purpose of identifying those that have multiple entrances not all of which are accessible.

1. The technical requirements and, where appropriate, the scoping requirements of the 2010 ADA Standards are used as a guide for determining whether a program or activity held in an existing facility is "readily accessible to and usable by" persons with disabilities and for determining what changes are necessary to make this program or activity accessible if it continues to be provided in the existing facility in question. *See* 28 C.F.R. §§ 35.150(b)(1), 35.151. The term "Standards" refers to the 2010 ADA Standards for Accessible Design (28 C.F.R. § 35.104 (Title II) (defining the "2010 Standards" as the requirements set forth in appendices B and D to 36 C.F.R. part 1191 and the requirements contained in 28 C.F.R. § 35.151.)). All citations are to the Standards, unless otherwise noted.

2. In order to ensure that each of the County's programs, services, and activities operating at a facility that is the subject of this Consent Decree, when viewed in its entirety, are readily accessible to and usable by persons with disabilities, the County will take the following actions:

3. Within 15 months of entry of this Consent Decree, the County will complete the following modifications to the **Humboldt County Courthouse**, located at 825 5th Street in Eureka.

    a. Parking

        i. One designated van accessible parking spaces has an access aisle that is 60 inches wide. At each accessible parking space, provide an access aisle that is at least 60 inches wide, except at van accessible parking spaces that are less than 132 inches wide, in which case provide an access aisle at least 96 inches wide. All access aisles shall adjoin an accessible route; extend the full length of the parking space they serve; be marked so as to discourage parking in them; contain no changes in level, with slopes and cross-slopes not exceeding 2.08%; and have surfaces that are firm, stable, and slip-resistant. Standards §§ 208, 302, 502.

        ii. The signs designating parking as reserved for persons with disabilities are not mounted at the required height. At sites with 5 or more parking spaces, provide vertical signs with the International Symbol of Accessibility at all spaces designated as reserved for persons with disabilities, and, at van accessible parking spaces, provide an additional "van accessible" sign. Mount signs at least 60 inches high to the bottom

of the sign. Standards §§ 208, 216.5, 502.6, 703.7.2.1.

b. Offices and Counters

i. The permanent room signs provided do not have Braille and/or raised characters and are not mounted 60 inches above the finished floor on the wall adjacent to the latch side of the door. Provide permanent room signage meeting the requirements of the Standards for raised characters, visual characters, and pictograms; accompanied by Grade 2 Braille. Tactile signs shall be mounted between 48 and 60 inches high on the wall adjacent to the latch side of the door or on the nearest adjacent wall (except that signs can be mounted on the inactive leaf of a double door or on the push side of doors with closers and without hold-open devices); and shall be located so that a clear floor space of at least 18 inches by 18 inches, centered on the tactile characters, is provided beyond the arc of any door's swing between the closed and 45 degrees open positions. Standards §§ 216, 703.

ii. Personnel, Room 100

(1) The pressure required to open the entry door is 10 pounds. Provide a door that requires no more than 5 pounds of force to open (not including the initial force needed to overcome inertia, retracting bolts, etc.). Standards §§ 206.5, 404.2.9.

(2) The entry door has knob hardware. Provide a door with hardware, mounted between 34 and 48 inches high, that is operable with one hand and does not require tight grasping, pinching, or twisting of the wrist and requires no more than 5 pounds of force to operate. Lever-operated mechanisms, push-type mechanisms, and U-shaped handles are acceptable designs. Standards §§ 206.4, 206.5, 309.4, 404.2.7.

(3) The door leading to the conference room has knob hardware. Provide a door with hardware, mounted between 34 and 48 inches high, that is operable with one hand and does not require tight grasping, pinching, or twisting of the wrist and requires no more than 5 pounds of force to operate. Lever-operated mechanisms, push-type mechanisms, and U-shaped handles are acceptable designs. Standards §§ 206.4, 206.5, 309.4, 404.2.7.

(4) The clear opening width of the door to the alternate conference room is reduced by a filing cabinet to 28 inches. Provide a door with a clear opening at least 32 inches wide, measured between the face of the door and the opposite stop, when the door is open 90 degrees. Standards §§ 206.4, 206.5, 404.2.3.

iii. Board of Supervisors, Room 111

(1) The pressure required to open the entry door is 12 pounds. Provide a door that requires no more than 5 pounds of force to open (not including the initial force needed to overcome inertia, retracting bolts, etc.). Standards §§ 206.5, 404.2.9.

(2) The entry door has knob hardware. Provide a door with hardware, mounted between 34 and 48 inches high, that is operable with one hand and does not require tight grasping, pinching, or twisting of the wrist and requires no more than 5 pounds of force to operate. Lever-operated mechanisms, push-type mechanisms, and U-shaped handles are acceptable designs. Standards §§ 206.4, 206.5, 309.4, 404.2.7.

(3) The top of the front counter is 44 inches above the finished floor. Provide counters dispersed throughout the facility (dispersion is not required where only 1 counter is provided) on accessible routes such that each counter has a portion extending the same depth as the counter top and no more than 36 inches high. If a parallel approach is provided, the accessible portion of the counter shall be at least 36 inches long (unless the entire counter is less than 36 inches high) and have clear floor space positioned for a parallel approach; if a forward approach is provided, the accessible portion of the counter shall be at least 30 inches long and have knee and toe space provided under the counter and clear floor space positioned for a forward approach. Standards §§ 227.3, 305, 306, 904.4.

(4) The clear opening width of the gate to the Board of Supervisors offices is 30 inches. Provide to each area, feature, or element described an accessible route with a minimum clear width of 36 inches, except that the width may decrease to 32 inches for a depth of no more than 24 inches. Standards §§ 206, 403.5.1.

(5) Supervisor's Chamber

(a) The pressure required to open the entry door to the Chamber near Room 111 is 6 pounds. Provide a door that requires no more than 5 pounds of force to open (not including the initial force needed to overcome inertia, retracting bolts, etc.). Standards §§ 206.5, 404.2.9.

(b) The Chamber door next to Room 111 has knob hardware. Provide a door with hardware, mounted between 34 and 48

inches high, that is operable with one hand and does not require tight grasping, pinching, or twisting of the wrist and requires no more than 5 pounds of force to operate. Lever-operated mechanisms, push-type mechanisms, and U-shaped handles are acceptable designs. Standards §§ 206.4, 206.5, 309.4, 404.2.7.

(c) The thumb latch hardware on the main door into the Supervisor's chamber requires tight grasping or pinching of the wrist. Provide a door with hardware, mounted between 34 and 48 inches high, that is operable with one hand and does not require tight grasping, pinching, or twisting of the wrist and requires no more than 5 pounds of force to operate. Lever-operated mechanisms, push-type mechanisms, and U-shaped handles are acceptable designs. Standards §§ 206.4, 206.5, 309.4, 404.2.7.

(d) No signage is provided informing the public of the availability of an assistive listening system. Provide accessible signage indicating the availability of the assistive listening system. Standards §§ 216.10, 219.2, 703.5, 703.7.2.4.

(e) No accessible route is provided connecting the Board of Supervisor's Offices with the Board of Supervisor's raised platform in the Supervisor's Chambers. Provide an accessible route connecting the Supervisor's Office to all spaces used by Supervisors. Standards §§ 206.2.8, 402.

iv. Grand Jury Room, 1st floor

(1) The entry door has knob hardware. Provide a door with hardware, mounted between 34 and 48 inches high, that is operable with one hand and does not require tight grasping, pinching, or twisting of the wrist and requires no more than 5 pounds of force to operate. Lever-operated mechanisms, push-type mechanisms, and U-shaped handles are acceptable designs. Standards §§ 206.4, 206.5, 309.4, 404.2.7.

c. Elevators

i. North Center Doors

(1) The elevator emergency communications system does not work without voice communication. Provide a two-way communication system that provides both audible and visible signals, with

operable parts between 15 and 48 inches high, and identified by raised characters and Braille adjacent to the device. If the system uses a handset, the cord shall be at least 29 inches long. If the system is located in a closed compartment, the compartment door hardware shall operate without tight grasping, pinching or twisting of the wrist. Standards §§ 206.6, 308, 309.4, 407.4.9, 703.2, 708.

ii. South Doors

(1) The elevator lacks audible signals for up or down. Provide visual car position indicators with characters at least ½ inch high above the car control panel or over the door that show the position of the elevator in the hoistway. Indicators shall emit an audible and visual signal as the car passes or stops at a floor served by the elevator, with the corresponding floor designation being illuminated. Standards §§ 206.6, 407.4.8.

(2) The elevator doors remain open 4 seconds after re-opening after being obstructed. Provide horizontal sliding doors that open and close automatically with a reopening device that will stop and reopen the car door and hoistway door automatically if the door becomes obstructed by an object or person. The device shall be capable of completing these operations without requiring contact for obstructions passing through the opening at heights of 5 inches and 29 inches; door reopening devices shall remain effective for at least 20 seconds, after which the doors may close; the minimum time from notification that a car is answering a call until the doors of that car start to close shall be 5 seconds; and the minimum time for elevator doors to remain fully open in response to a car call shall be 3 seconds. Standards §§ 206.6, 407.3.

(3) The elevator emergency communications system does not work without voice communication. Provide a two-way communication system that provides both audible and visible signals, with operable parts between 15 and 48 inches high, and identified by raised characters and Braille adjacent to the device. If the system uses a handset, the cord shall be at least 29 inches long. If the system is located in a closed compartment, the compartment door hardware shall operate without tight grasping, pinching or twisting of the wrist. Standards §§ 206.6, 308, 309.4, 407.4.9, 703.2, 708.

4. Within 21 months of entry of this Consent Decree, the County will complete the following modifications to the **Department of Public Health**, located at 550 I Street in Eureka.

a. The ramp lacks handrail extensions at the top and the bottom; the ends of

handrails are not rounded or returned smoothly to the floor, wall or post; and handrails are not smooth and free of sharp objects. On both sides of the ramp, provide handrails that have a diameter between 1¼ and 2 inches or a perimeter between 4 inches and 6¼ inches and a cross section of no more than 2¼ inches such that the handrails are continuous along the full length of the ramp run. Inside handrails on switchbacks or doglegs shall be continuous between runs; handrails shall have a continuous gripping surface extending at least 12 inches beyond the top and bottom of the ramp parallel with the ground surface (except in alterations where extensions would be hazardous due to plan configuration); extensions shall return to the wall, guard, or landing surface (or continue on as handrails); handrails shall not rotate within their fittings; handrails shall be mounted at a consistent height between 34 inches and 38 inches above the ramp surface and at least 1½ inches from the wall; gripping surfaces and adjacent surfaces shall be free of sharp or abrasive elements and have rounded edges; and gripping surfaces shall not be obstructed along their tops or sides and the bottoms shall not be obstructed for more than 20% of their length and have no horizontal projections occurring closer than 1½ inches from the bottom of the gripping surface (except that the distance between horizontal projections and the bottom of the gripping surface can be reduced by ⅛ inch for each ½ inch of handrail perimeter over 4 inches). Standards §§ 206.2, 405.8, 505.

b. Accessible Route

i. The route to the clinic is 30 inches wide. Provide to each area, feature, or element described an accessible route with a minimum clear width of 36 inches, except that the width may decrease to 32 inches for a depth of no more than 24 inches. Standards §§ 206, 403.5.1.

ii. The clear opening width of the door to the clinic is 30 inches. Provide a door with a clear opening at least 32 inches wide, measured between the face of the door and the opposite stop, when the door is open 90 degrees. Standards §§ 206.4, 206.5, 404.2.3.

c. Drinking Fountain

i. The drinking fountain next to the women's toilet room has a spout that is 38 inches above the finished floor. Provide 50% of all drinking fountains on each floor or exterior site with a spout outlet between 38 and 43 inches high and 50% of all drinking fountains on each floor or exterior site with a spout outlet no more than 36 inches high that otherwise complies with the Standards. At least one of each type shall be provided. Standards §§ 211, 602.4, 602.7.

ii. The higher drinking fountain next to the women's toilet room is a protruding object not detectable to a blind person using a cane. Unless protected by a cane detectable barrier, objects with their leading edges

between 27 inches and 80 inches high shall not protrude into circulation paths more than 4 inches for wall-mounted elements, or 12 inches for free standing post- or pylon-mounted elements. Protruding objects (and cane-detectable barriers) shall not reduce the clear width of accessible routes or maneuvering spaces below minimum requirements. Standards §§ 206, 307.

d. Toilet Rooms

i. Women's

(1) The toilet room sign is not mounted on the wall adjacent to the door and does not have Braille and/or raised characters. Provide a toilet room sign with raised and Braille characters. Tactile signs shall be mounted on the wall adjacent to the latch side of the door or the nearest adjacent wall (except that signs can be mounted on the push side of doors with closers and without hold-open devices); mounted between 48 and 60 inches high; and located so that a clear floor space of at least 18 inches by 18 inches, centered on the tactile characters, is provided beyond the arc of any door's swing between the closed and 45 degrees open positions. If not all toilet rooms are accessible, provide signage with the International Symbol of Accessibility at all accessible toilet rooms. Standards §§ 216.8, 703.

(2) The pressure required to open the door entry is 6 pounds. Provide a door that requires no more than 5 pounds of force to open (not including the initial force needed to overcome inertia, retracting bolts, etc.). Standards §§ 206.5, 404.2.9.

(3) The entry door has knob hardware. Provide a door with hardware, mounted between 34 and 48 inches high, that is operable with one hand and does not require tight grasping, pinching, or twisting of the wrist and requires no more than 5 pounds of force to operate. Lever-operated mechanisms, push-type mechanisms, and U-shaped handles are acceptable designs. Standards §§ 206.4, 206.5, 309.4, 404.2.7.

(4) The entry door has 2 inches of clear floor space on the latch side in the push direction. Provide maneuvering clearance at least 48 inches deep perpendicular to the doorway and at least 12 inches wide parallel to the doorway on the latch side. Standards §§ 206.5, 404.2.4.1.

(5) No accessible mirror is provided. Provide at least one mirror such that, if it is mounted above a lavatory or countertop, it is mounted

with the bottom edge of the reflecting surface no more than 40 inches high; or, if it is not mounted above a lavatory or countertop, it is mounted with the bottom edge of the reflecting surface no more than 35 inches high. Standards §§ 213.2, 603.3.

(6) Insufficient turning space is provided within the toilet room. Provide an unobstructed turning space at least 60 inches in diameter or a T-shaped space complying with § 304.3.2. Standards §§ 213.2, 304.3, 603.2.1.

(7) The toilet seat cover dispenser is mounted at 50 inches above the finished floor with a forward reach over a 30 inch obstruction. Operable parts and controls of this element shall be no more than 48 inches high for a forward reach, or no more than 44 inches high if over an obstruction between 20 and 25 inches deep (for a forward reach, obstructions may not be deeper than 25 inches and obstructions must allow knee space); or mounted not more than 48 inches high for a side reach, or no more than 46 inches high if over an obstruction between 10 and 24 inches deep (for a side reach, obstructions may not be deeper than 24 inches); and accompanied by clear floor space of 30 inches by 48 inches that allows a forward or parallel approach, respectively, by a person using a wheelchair. Standards §§ 205.1, 305, 308.2, 308.3.

(8) The soap dispenser controls are 51 inches above the finished floor with a forward read required over a 16 inch obstruction. Operable parts and controls of this element shall be no more than 48 inches high for a forward reach, or no more than 44 inches high if over an obstruction between 20 and 25 inches deep (for a forward reach, obstructions may not be deeper than 25 inches and obstructions must allow knee space); or mounted not more than 48 inches high for a side reach, or no more than 46 inches high if over an obstruction between 10 and 24 inches deep (for a side reach, obstructions may not be deeper than 24 inches); and accompanied by clear floor space of 30 inches by 48 inches that allows a forward or parallel approach, respectively, by a person using a wheelchair. Standards §§ 205.1, 305, 308.2, 308.3.

(9) The paper towel dispenser controls are 60 inches above the finished floor. Operable parts and controls of this element shall be between 15 and 48 inches high and accompanied by clear floor space of 30 by 48 inches that allows a forward or parallel approach by a person using a wheelchair. Standards §§ 205.1, 305, 308.2, 308.3, 309.

(10) The bottom of the apron of the lavatory is mounted 27 inches

above the finished floor; the hot water pipes and drain are not covered or configured to protect against contact; the faucet hardware requires tight grasping, pinching, or twisting of the wrist; and the clear floor space at the sink is obstructed by the trash can. Provide at least 5% of all lavatories and sinks with the top of the rim or counter 34 inches high or less; knee clearance at least 30 inches wide, between 9 inches and 27 inches high, extending between 11 and 25 inches deep at 9 inches high, and extending at least 8 inches deep at 27 inches high; and toe clearance at least 30 inches wide and 9 inches high, and extending between 17 and 25 inches deep under the lavatory; water supply and drain pipes insulated or otherwise configured to protect against contact; no sharp or abrasive surfaces underneath; clear floor space at least 30 inches wide by 48 inches deep positioned for a forward approach (except that a parallel approach with no knee and toe clearance can be provided at a kitchen sink where there is no cook top or conventional range and at wet bars); and a faucet that can be operated with no more than 5 pounds of force and can be used with one hand and without tight grasping, pinching, or twisting of the wrist (lever-operated, push-type, and electronically controlled mechanisms are examples of acceptable designs). Hand-operated metering faucets shall remain open for at least 10 seconds. Standards §§ 213.3.4, 305, 306, 309, 606.

(11) The toilet has insufficient clear floor space. Provide clearance at the toilet that is at least 60 inches wide and 56 inches deep. This clearance may overlap with the toilet, grab bars, dispensers, sanitary napkin disposal, coat hooks, shelves, accessible routes, clear floor space and clearances for other fixtures, and turning space; but no other fixtures or obstructions, including lavatories, may be located within this clearance. Standards §§ 213.3.2, 604.3.

(12) The top of the toilet seat is 15 inches above the finished floor. Provide a toilet with the top of the seat 17 to 19 inches high. The seat shall not be sprung to return to a lifted position. Standards §§ 213.3.2, 604.4.

(13) The toilet centerline is 23 inches from the side wall. Provide a toilet with its centerline between 16 and 18 inches from the near side wall. Standards §§ 213.3.2, 604.2.

(14) The toilet flush control is on the closed side. Provide a flush control mounted on the “open” side of the toilet’s clear floor space, between 15 and 48 inches high, and requiring a maximum of 5 pounds of force to operate; or provide an automatic flush device. Standards §§ 213.3.2, 309.4, 604.6.

(15) No accessible coat hook is provided. Provide a coat hook between 15 and 48 inches high accompanied by clear floor space of 30 by 48 inches. Standards §§ 213.3.7, 305, 308, 603.4.

(16) The toilet paper dispenser is mounted on the wall opposite the side grab bar. Provide a toilet paper dispenser that is mounted with its centerline between 7 and 9 inches from the front of the toilet and with its outlet between 15 and 48 inches high with continuous paper flow that does not control delivery. The dispenser shall be mounted either at least 1½ inches below the side grab bar or at least 12 inches above the side grab bar. Standards §§ 213.3.2, 604.7, 609.3.

ii. Men's

(1) The toilet room sign is not mounted on the wall adjacent to the latch side of the door and does not have Braille and/or raised characters. Provide a toilet room sign with raised and Braille characters. Tactile signs shall be mounted on the wall adjacent to the latch side of the door or the nearest adjacent wall (except that signs can be mounted on the push side of doors with closers and without hold-open devices); mounted between 48 and 60 inches high; and located so that a clear floor space of at least 18 inches by 18 inches, centered on the tactile characters, is provided beyond the arc of any door's swing between the closed and 45 degrees open positions. If not all toilet rooms are accessible, provide signage with the International Symbol of Accessibility at all accessible toilet rooms. Standards §§ 216.8, 703.

(2) The pressure required to open the entry door is 9 pounds. Provide a door that requires no more than 5 pounds of force to open (not including the initial force needed to overcome inertia, retracting bolts, etc.). Standards §§ 206.5, 404.2.9.

(3) The entry door has knob hardware. Provide a door with hardware, mounted between 34 and 48 inches high, that is operable with one hand and does not require tight grasping, pinching, or twisting of the wrist and requires no more than 5 pounds of force to operate. Lever-operated mechanisms, push-type mechanisms, and U-shaped handles are acceptable designs. Standards §§ 206.4, 206.5, 309.4, 404.2.7.

(4) No accessible mirror is provided. Provide at least one mirror such that, if it is mounted above a lavatory or countertop, it is mounted with the bottom edge of the reflecting surface no more than 40

inches high; or, if it is not mounted above a lavatory or countertop, it is mounted with the bottom edge of the reflecting surface no more than 35 inches high. Standards §§ 213.2, 603.3

(5) Insufficient turning space is provided within the toilet room. Provide an unobstructed turning space at least 60 inches in diameter or a T-shaped space complying with § 304.3.2. Standards §§ 213.2, 304.3, 603.2.1.

(6) The toilet seat cover dispenser mounted at 51 inches above the finished floor with a forward reach. Operable parts and controls of this element shall be between 15 and 48 inches high and accompanied by clear floor space of 30 by 48 inches that allows a forward or parallel approach by a person using a wheelchair. Standards §§ 205.1, 305, 308.2, 308.3, 309.

(7) The paper towel dispenser controls are mounted at 61 inches above the finished floor. Operable parts and controls of this element shall be between 15 and 48 inches high and accompanied by clear floor space of 30 by 48 inches that allows a forward or parallel approach by a person using a wheelchair. Standards §§ 205.1, 305, 308.2, 308.3, 309.

(8) The bottom of the apron of the lavatory is mounted 28 inches above the finished floor; the hot water pipes and drain are not covered or configured to protect against contact; and the faucet hardware requires tight grasping, pinching, or twisting of the wrist. Provide at least 5% of all lavatories and sinks with the top of the rim or counter 34 inches high or less; knee clearance at least 30 inches wide, between 9 inches and 27 inches high, extending between 11 and 25 inches deep at 9 inches high, and extending at least 8 inches deep at 27 inches high; and toe clearance at least 30 inches wide and 9 inches high, and extending between 17 and 25 inches deep under the lavatory; water supply and drain pipes insulated or otherwise configured to protect against contact; no sharp or abrasive surfaces underneath; clear floor space at least 30 inches wide by 48 inches deep positioned for a forward approach (except that a parallel approach with no knee and toe clearance can be provided at a kitchen sink where there is no cook top or conventional range and at wet bars); and a faucet that can be operated with no more than 5 pounds of force and can be used with one hand and without tight grasping, pinching, or twisting of the wrist (lever-operated, push-type, and electronically controlled mechanisms are examples of acceptable designs). Hand-operated metering faucets shall remain open for at least 10 seconds. Standards §§ 213.3.4, 305, 306, 309, 606.

(9) No accessible toilet compartment is provided. Provide an accessible toilet compartment at least 60 inches wide and at least 59 inches deep (or at least 56 inches deep with a wall-mounted toilet) such that all of the compartment's elements, including door, door hardware, toilet, size and arrangement, toe clearances, grab bars, controls, and dispensers, comply with the Standards. Standards §§ 213.3.1, 301.1, 404, 604, 604.8.1, 609.

5. Within 15 months of entry of this Consent Decree, the County will complete the following modifications to **Public Works**, located at 1106 2nd Street in Eureka.

a. No accessible parking spaces are provided. On the shortest accessible route to the accessible entrance, provide 1 van accessible space designated as reserved for people with disabilities. Van accessible spaces shall be at least 132 inches wide and served by access aisles at least 60 inches wide, or at least 96 inches wide and served by access aisles at least 96 inches wide. Access aisles shall extend the full length of the parking spaces they serve and shall be marked so as to discourage parking in them. At sites with 5 or more parking spaces, provide vertical signs with the International Symbol of Accessibility at all spaces designated as reserved for persons with disabilities, mounted at least 60 inches high to the bottom of the sign. At van accessible spaces, provide an additional "van accessible" sign mounted at least 60 inches high to the bottom of the sign. All spaces and access aisles for persons with disabilities shall contain no changes in level, with slopes and cross-slopes not exceeding 2.08%, and their surfaces shall be firm, stable, and slip-resistant. If the parking facility does not serve a particular building or facility, provide accessible parking on the shortest accessible route to an accessible pedestrian entrance of the parking facility. If the parking facility serves a building with multiple accessible entrances or multiple buildings or facilities, provide dispersed parking spaces located on an accessible route closest to the accessible entrances. If the parking facility is a parking garage or otherwise has limitations on vertical clearances, provide minimum vertical clearance of 98 inches at the van accessible parking spaces and along at least one vehicle access route to such spaces from site entrances and exits. Standards §§ 208, 302, 502, 703.7.2.1.

b. The route from the parking lot into the rear entrance contains 2 steps, and the route from the parking lot into the front entrance contains a 1 inch threshold at the door. Provide an accessible route to each area, feature, or element described such that level changes in excess of ½ inch are ramped (or otherwise made accessible); level changes with exposed edges of up to 90 degrees are not more than ¼ inch high; and level changes between ½ inch and ¼ inch high are beveled with a slope no greater than 50% (or up to ¼ inch vertical and at least ¼ inch beveled). Provide an accessible door with a threshold that is no more than ¼ inch high, or is between ¼ inch and ½ inch high (¾ inch high if the threshold is existing or

altered) and is beveled with a slope no greater than 50%. Standards §§ 206, 302, 303, 404.2.5.

c. The top of the information counter is 42 inches above the finished floor. Provide counters dispersed throughout the facility (dispersion is not required where only 1 counter is provided) on accessible routes such that each counter has a portion extending the same depth as the counter top and no more than 36 inches high. If a parallel approach is provided, the accessible portion of the counter shall be at least 36 inches long (unless the entire counter is less than 36 inches high) and have clear floor space positioned for a parallel approach; if a forward approach is provided, the accessible portion of the counter shall be at least 30 inches long and have knee and toe space provided under the counter and clear floor space positioned for a forward approach. Standards §§ 227.3, 305, 306, 904.4.

d. The route from the parking lot into the Natural Resources Office (modular building) contains steps. Provide an accessible route to each area, feature, or element described such that level changes in excess of ½ inch are ramped (or otherwise made accessible); level changes with exposed edges of up to 90 degrees are not more than ¼ inch high; and level changes between ½ inch and ¼ inch high are beveled with a slope no greater than 50% (or up to ¼ inch vertical and at least ¼ inch beveled). Standards §§ 206, 303.

e. The route from the parking lot to the outbuilding meeting room contains steps. Provide an accessible route to each area, feature, or element described such that level changes in excess of ½ inch are ramped (or otherwise made accessible); level changes with exposed edges of up to 90 degrees are not more than ¼ inch high; and level changes between ½ inch and ¼ inch high are beveled with a slope no greater than 50% (or up to ¼ inch vertical and at least ¼ inch beveled). Standards §§ 206, 303.

f. Single User Toilet Rooms

i. Men's

(1) The toilet room sign is not mounted on the wall adjacent to the latch side of the door and has no Braille and/or raised characters. Provide a toilet room sign with raised and Braille characters. Tactile signs shall be mounted on the wall adjacent to the latch side of the door or the nearest adjacent wall (except that signs can be mounted on the push side of doors with closers and without hold-open devices); mounted between 48 and 60 inches high; and located so that a clear floor space of at least 18 inches by 18 inches, centered on the tactile characters, is provided beyond the arc of any door's swing between the closed and 45 degrees open positions. If not all toilet rooms are accessible, provide signage with the International Symbol of Accessibility at all accessible

toilet rooms. Standards §§ 216.8, 703.

(2) The pressure required to open the entry door is 7 pounds. Provide a door that requires no more than 5 pounds of force to open (not including the initial force needed to overcome inertia, retracting bolts, etc.). Standards §§ 206.5, 404.2.9.

(3) The door has knob hardware. Provide a door with hardware, mounted between 34 and 48 inches high, that is operable with one hand and does not require tight grasping, pinching, or twisting of the wrist and requires no more than 5 pounds of force to operate. Lever-operated mechanisms, push-type mechanisms, and U-shaped handles are acceptable designs. Standards §§ 206.4, 206.5, 309.4, 404.2.7.

(4) The toilet room exit door has 9½ inches of clear floor space on the latch side in the pull direction. Provide maneuvering clearance at least 18 inches wide parallel to the doorway on the latch side of the door. Standards §§ 206.5, 404.2.4.1.

(5) The toilet room entrance door, which is accessed through a front approach and which has both a closer and a latch, has 9½ inches of clear floor space on the latch side in the push direction. Provide maneuvering clearance at least 12 inches wide parallel to the doorway on the latch side of the door. Standards §§ 206.5, 404.2.4.1.

(6) The toilet room door swings into the required clear floor space at the toilet and lavatory. No door shall swing into the required clear floor space or clearance at any accessible fixture (*e.g.*, toilet, urinal, lavatory). Standards §§ 213.2, 603.2.3.

(7) The light switch is mounted higher than 54 inches above the finished floor. Operable parts and controls of this element shall be between 15 and 48 inches high and accompanied by clear floor space of 30 by 48 inches that allows a forward or parallel approach by a person using a wheelchair. Standards §§ 205.1, 305, 308.2, 308.3, 309.

(8) No accessible mirror is provided. Provide at least one mirror such that, if it is mounted above a lavatory or countertop, it is mounted with the bottom edge of the reflecting surface no more than 40 inches high; or, if it is not mounted above a lavatory or countertop, it is mounted with the bottom edge of the reflecting surface no more than 35 inches high. Standards §§ 213.2, 603.3.

(9) Insufficient turning space is provided within the toilet room. Provide an unobstructed turning space at least 60 inches in diameter or a T-shaped space complying with § 304.3.2. Standards §§ 213.2, 304.3, 603.2.1.

(10) The toilet seat cover dispenser is mounted at 53 inches above the finished floor with a forward reach. Operable parts and controls of this element shall be between 15 and 48 inches high and accompanied by clear floor space of 30 by 48 inches that allows a forward or parallel approach by a person using a wheelchair. Standards §§ 205.1, 305, 308.2, 308.3, 309.

(11) The lavatory water supply and drain pipes are not insulated or otherwise configured to protect against contact and no clear floor space is provided at the lavatory. Provide at least 5% of all lavatories and sinks with the top of the rim or counter 34 inches high or less; knee clearance at least 30 inches wide, between 9 inches and 27 inches high, extending between 11 and 25 inches deep at 9 inches high, and extending at least 8 inches deep at 27 inches high; and toe clearance at least 30 inches wide and 9 inches high, and extending between 17 and 25 inches deep under the lavatory; water supply and drain pipes insulated or otherwise configured to protect against contact; no sharp or abrasive surfaces underneath; clear floor space at least 30 inches wide by 48 inches deep positioned for a forward approach (except that a parallel approach with no knee and toe clearance can be provided at a kitchen sink where there is no cook top or conventional range and at wet bars); and a faucet that can be operated with no more than 5 pounds of force and can be used with one hand and without tight grasping, pinching, or twisting of the wrist (lever-operated, push-type, and electronically controlled mechanisms are examples of acceptable designs). Hand-operated metering faucets shall remain open for at least 10 seconds. Standards §§ 213.3.4, 305, 306, 309, 606.

(12) The toilet lacks the required clear floor space, the seat is 15¼ inches above the finished floor, and the flush control is on the closed side of the toilet. Provide clearance at the toilet that is at least 60 inches wide and 56 inches deep. This clearance may overlap with the toilet, grab bars, dispensers, sanitary napkin disposal, coat hooks, shelves, accessible routes, clear floor space and clearances for other fixtures, and turning space; but no other fixtures or obstructions, including lavatories, may be located within this clearance. Provide a toilet with the top of the seat 17 to 19 inches high. The seat shall not be sprung to return to a lifted position. Provide a flush control mounted on the “open” side of

the toilet's clear floor space, between 15 and 48 inches high, and requiring a maximum of 5 pounds of force to operate; or provide an automatic flush device. Standards §§ 213.3.2, 309.4, 604.3, 604.4. 604.6.

(13) No grab bars are provided. Provide a rear grab bar that is at least 36 inches long (except where wall space does not permit it due to the location of a recessed fixture, in which case the grab bar may be 24 inches long), extending 12 inches from the toilet centerline on one side and 24 inches on the other side (except where an administrative authority requires flush controls to be located in a position that conflicts with the location of the rear grab bar, in which case the bar may be split or shifted to the open side). Provide a side grab bar that is at least 42 inches in overall length, with the far end mounted at least 54 inches from the rear wall and the closer end no more than 12 inches from the rear wall. Grab bars shall be mounted between 33 and 36 inches high to the top of the gripping surface; with a diameter between 1¼ and 2 inches (or, if the grab bar is not circular, a perimeter between 4 and 4¾ inches and cross-section dimensions of no more than 2 inches); with 1½ inches between the grab bar and the wall; and at least 1½ inches between the grab bar and any object projecting beside or below it and at least 12 inches between the grab bar and any object projecting above it. Grab bars shall also comply with requirements for surface hazards, fittings, and structural strength. Standards §§ 213.3.2, 604.5, 609.

ii. Women's

(1) The toilet room sign is not mounted on the wall adjacent to the latch side of the door and has no Braille and/or raised characters. Provide a toilet room sign with raised and Braille characters. Tactile signs shall be mounted on the wall adjacent to the latch side of the door or the nearest adjacent wall (except that signs can be mounted on the push side of doors with closers and without hold-open devices); mounted between 48 and 60 inches high; and located so that a clear floor space of at least 18 inches by 18 inches, centered on the tactile characters, is provided beyond the arc of any door's swing between the closed and 45 degrees open positions. If not all toilet rooms are accessible, provide signage with the International Symbol of Accessibility at all accessible toilet rooms. Standards §§ 216.8, 703.

(2) The door has knob hardware. Provide a door with hardware, mounted between 34 and 48 inches high, that is operable with one hand and does not require tight grasping, pinching, or twisting of

the wrist and requires no more than 5 pounds of force to operate. Lever-operated mechanisms, push-type mechanisms, and U-shaped handles are acceptable designs. Standards §§ 206.4, 206.5, 309.4, 404.2.7.

(3) No accessible mirror is provided. Provide at least one mirror such that, if it is mounted above a lavatory or countertop, it is mounted with the bottom edge of the reflecting surface no more than 40 inches high; or, if it is not mounted above a lavatory or countertop, it is mounted with the bottom edge of the reflecting surface no more than 35 inches high. Standards §§ 213.2, 603.3.

(4) The toilet seat cover dispenser is 61½ inches above the finished floor with a forward reach. Operable parts and controls of this element shall be between 15 and 48 inches high and accompanied by clear floor space of 30 by 48 inches that allows a forward or parallel approach by a person using a wheelchair. Standards §§ 205.1, 305, 308.2, 308.3, 309.

(5) The paper towel dispenser controls are 57 inches above the finished floor with a forward reach. Operable parts and controls of this element shall be between 15 and 48 inches high and accompanied by clear floor space of 30 by 48 inches that allows a forward or parallel approach by a person using a wheelchair. Standards §§ 205.1, 305, 308.2, 308.3, 309.

(6) The lavatory water supply and drain pipes are not insulated or otherwise configured to protect against contact; the faucet hardware requires tight grasping, pinching, or twisting of the wrist; and the required clear floor space is not provided. Provide at least 5% of all lavatories and sinks with the top of the rim or counter 34 inches high or less; knee clearance at least 30 inches wide, between 9 inches and 27 inches high, extending between 11 and 25 inches deep at 9 inches high, and extending at least 8 inches deep at 27 inches high; and toe clearance at least 30 inches wide and 9 inches high, and extending between 17 and 25 inches deep under the lavatory; water supply and drain pipes insulated or otherwise configured to protect against contact; no sharp or abrasive surfaces underneath; clear floor space at least 30 inches wide by 48 inches deep positioned for a forward approach (except that a parallel approach with no knee and toe clearance can be provided at a kitchen sink where there is no cook top or conventional range and at wet bars); and a faucet that can be operated with no more than 5 pounds of force and can be used with one hand and without tight grasping, pinching, or twisting of the wrist (lever-operated, push-type, and electronically controlled mechanisms are examples of

acceptable designs). Hand-operated metering faucets shall remain open for at least 10 seconds. Standards §§ 213.3.4, 305, 306, 309, 606.

(7) The toilet lacks the required clear floor space, the seat is 15.25 inches above the finished floor, and the flush control is on the closed side of the toilet. Provide clearance at the toilet that is at least 60 inches wide and 56 inches deep. This clearance may overlap with the toilet, grab bars, dispensers, sanitary napkin disposal, coat hooks, shelves, accessible routes, clear floor space and clearances for other fixtures, and turning space; but no other fixtures or obstructions, including lavatories, may be located within this clearance. Provide a toilet with the top of the seat 17 to 19 inches high. The seat shall not be sprung to return to a lifted position. Provide a flush control mounted on the "open" side of the toilet's clear floor space, between 15 and 48 inches high, and requiring a maximum of 5 pounds of force to operate; or provide an automatic flush device. Standards §§ 213.3.2, 309.4, 604.3, 604.4. 604.6.

(8) No grab bars are provided. Provide a rear grab bar that is at least 36 inches long (except where wall space does not permit it due to the location of a recessed fixture, in which case the grab bar may be 24 inches long), extending 12 inches from the toilet centerline on one side and 24 inches on the other side (except where an administrative authority requires flush controls to be located in a position that conflicts with the location of the rear grab bar, in which case the bar may be split or shifted to the open side). Provide a side grab bar that is at least 42 inches in overall length, with the far end mounted at least 54 inches from the rear wall and the closer end no more than 12 inches from the rear wall. Grab bars shall be mounted between 33 and 36 inches high to the top of the gripping surface; with a diameter between 1¼ and 2 inches (or, if the grab bar is not circular, a perimeter between 4 and 4¾ inches and cross-section dimensions of no more than 2 inches); with 1½ inches between the grab bar and the wall; and at least 1½ inches between the grab bar and any object projecting beside or below it and at least 12 inches between the grab bar and any object projecting above it. Grab bars shall also comply with requirements for surface hazards, fittings, and structural strength. Standards §§ 213.3.2, 604.5, 609.

g. Drinking Fountain

i. The drinking fountain spout is 39 inches above the finished floor. Provide 50% of all drinking fountains on each floor or exterior site with a spout

outlet between 38 and 43 inches high and 50% of all drinking fountains on each floor or exterior site with a spout outlet no more than 36 inches high that otherwise complies with the Standards. At least one of each type shall be provided. Standards §§ 211, 602.4, 602.7.

6. Within 21 months of entry of this Consent Decree unless another timeframe is noted below, the County will complete the following modifications to the facilities in the **Clark Complex** in Eureka.

a. Mental Health Center, 720 Wood Street, Eureka.

i. One designated accessible standard parking space is provided. On the shortest accessible route to the accessible entrance(s), provide 3 standard accessible and 1 van accessible parking spaces designated as reserved for people with disabilities. Standard accessible spaces shall be at least 96 inches wide and served by access aisles at least 60 inches wide. Van accessible spaces shall be at least 132 inches wide and served by access aisles at least 60 inches wide, or at least 96 inches wide and served by access aisles at least 96 inches wide. Access aisles shall extend the full length of the parking spaces they serve and shall be marked so as to discourage parking in them. At sites with 5 or more parking spaces, provide vertical signs with the International Symbol of Accessibility at all spaces designated as reserved for persons with disabilities, mounted at least 60 inches high to the bottom of the sign. At van accessible spaces, provide an additional "van accessible" sign mounted at least 60 inches high to the bottom of the sign. All spaces and access aisles for persons with disabilities shall contain no changes in level, with slopes and cross-slopes not exceeding 2.08%, and their surfaces shall be firm, stable, and slip-resistant. If the parking facility does not serve a particular building or facility, provide accessible parking on the shortest accessible route to an accessible pedestrian entrance of the parking facility. If the parking facility serves a building with multiple accessible entrances or multiple buildings or facilities, provide dispersed parking spaces located on an accessible route closest to the accessible entrances. If the parking facility is a parking garage or otherwise has limitations on vertical clearances, provide minimum vertical clearance of 98 inches at the van accessible parking spaces and along at least one vehicle access route to such spaces from site entrances and exits. Standards §§ 208, 302, 502, 703.7.2.1.

ii. No permanent room signs are provided. Provide permanent room signage meeting the requirements of the Standards for raised characters, visual characters, and pictograms; accompanied by Grade 2 Braille. Tactile signs shall be mounted between 48 and 60 inches high on the wall adjacent to the latch side of the door or on the nearest adjacent wall (except that signs can be mounted on the inactive leaf of a double door or on the push side of

doors with closers and without hold-open devices); and shall be located so that a clear floor space of at least 18 inches by 18 inches, centered on the tactile characters, is provided beyond the arc of any door's swing between the closed and 45 degrees open positions. Standards §§ 216, 703.

iii. Telephones

(1) The telephone on the first floor is mounted with its highest operable part at 54 inches above the finished floor, with a forward reach required. Provide an accessible telephone with clear floor space of at least 30 inches by 48 inches that allows either a forward or parallel approach such that bases, enclosures, and fixed seats do not impede approaches to the telephone. All operable parts of the telephone shall be mounted between 15 and 48 inches high; volume control shall be provided; the cord shall be at least 29 inches long from the telephone to the handset; and there shall be a picture of a telephone handset with radiating sound waves. Standards §§ 217, 305, 309, 703.7.2.3, 704.

(2) The telephone on the second floor is a protruding object. Unless protected by a cane detectable barrier, objects with their leading edges between 27 inches and 80 inches high shall not protrude into circulation paths more than 4 inches for wall-mounted elements, or 12 inches for free standing post- or pylon-mounted elements. Protruding objects (and cane-detectable barriers) shall not reduce the clear width of accessible routes or maneuvering spaces below minimum requirements. Standards §§ 206, 307.

iv. Elevator

(1) The hall call buttons are centered at 54 inches above the finished floor and the buttons do not have visual signals to indicate that a call has been registered or answered. Provide hall (lobby) call buttons with visible signals indicating when each call is registered and when each call is answered. The call buttons shall be between 15 and 48 inches high (except that existing buttons can be 54 inches high); shall be at least ¾ inch in the smallest dimension, with the button designating the up direction on top; and the call buttons shall be raised or flush (except that existing buttons can be recessed). Standards §§ 206.6, 407.2.1.

(2) No hall call lanterns are provided. Provide hall signals (which may be in-car signals) at each hoistway entrance that emit a visible and audible signal indicating which car is answering a call and the direction of travel. Audible signals shall sound once for the up direction and twice for the down direction or have verbal

annunciators indicating direction; and visible signals shall be at least 2½ inches tall, mounted with the centerline at least 72 inches high, and visible from the vicinity of the hall call button. Existing elevators do not need to signal the direction of travel or comply with specific requirements for visible signals. Standards §§ 206.6, 407.2.2.

(3) No hoistway signs are provided. Provide signage with raised and Braille floor designations on both jambs of hoistway entrances, mounted between 48 and 60 inches high, with characters at least 2 inches tall. Provide a tactile star on both jambs at the main entry level. Standards §§ 206.6, 407.2.3, 703.2, 703.3, 703.4.1.

(4) The door closes in less than 5 seconds after notification. Provide horizontal sliding doors that open and close automatically with a reopening device that will stop and reopen the car door and hoistway door automatically if the door becomes obstructed by an object or person. The device shall be capable of completing these operations without requiring contact for obstructions passing through the opening at heights of 5 inches and 29 inches; door reopening devices shall remain effective for at least 20 seconds, after which the doors may close; the minimum time from notification that a car is answering a call until the doors of that car start to close shall be 5 seconds; and the minimum time for elevator doors to remain fully open in response to a car call shall be 3 seconds. Standards §§ 206.6, 407.3.

(5) No raised star is provided to indicate the main floor on the control panel, no car position indicators are provided, the floor buttons do not indicate when a call is registered or answered, and the emergency controls are mounted 61 inches above the floor of the car. Provide car control buttons that are at least ¾ inch in their smallest dimension, are raised or flush, and are designated by Braille and raised characters. The call buttons for emergency stop, alarm, door open, door close, main entry floor, and phone shall be designated by symbols as required in § 407.4.7.1.3; all raised designations for control buttons shall be placed immediately to the left of the buttons to which they apply; floor buttons shall be provided with visual indicators to show that a call has been registered and shall extinguish when the car arrives at the floor; all buttons shall be between 15 and 48 inches high (or no more than 54 inches high if there are more than 16 floors or openings and a parallel approach is provided); and emergency controls, including the emergency alarm and emergency stop, shall be grouped at the bottom of the panel with their centerlines at least 35 inches high. Buttons shall be arranged with numbers in ascending order and

reading from left to right. Standards §§ 206.6, 407.4.6, 407.4.7, 703.2, 703.3.

(6) Access to the emergency communications system requires tight grasping, pinching or twisting of the wrist and the system does not operate without voice communication. Provide a two-way communication system that provides both audible and visible signals, with operable parts between 15 and 48 inches high, and identified by raised characters and Braille adjacent to the device. If the system uses a handset, the cord shall be at least 29 inches long. If the system is located in a closed compartment, the compartment door hardware shall operate without tight grasping, pinching or twisting of the wrist. Standards §§ 206.6, 308, 309.4, 407.4.9, 703.2, 708.

v. Offices and Counters

(1) Main reception counter has no lower section nor is equivalent facilitation provided. Provide counters dispersed throughout the facility (dispersion is not required where only 1 counter is provided) on accessible routes such that each counter has a portion extending the same depth as the counter top and no more than 36 inches high. If a parallel approach is provided, the accessible portion of the counter shall be at least 36 inches long (unless the entire counter is less than 36 inches high) and have clear floor space positioned for a parallel approach; if a forward approach is provided, the accessible portion of the counter shall be at least 30 inches long and have knee and toe space provided under the counter and clear floor space positioned for a forward approach. Standards §§ 227.3, 305, 306, 904.4.

(2) Conference room door has knob hardware. Provide a door with hardware, mounted between 34 and 48 inches high, that is operable with one hand and does not require tight grasping, pinching, or twisting of the wrist and requires no more than 5 pounds of force to operate. Lever-operated mechanisms, push-type mechanisms, and U-shaped handles are acceptable designs. Standards §§ 206.4, 206.5, 309.4, 404.2.7.

(3) Group meeting room 119 door has knob hardware. Provide a door with hardware, mounted between 34 and 48 inches high, that is operable with one hand and does not require tight grasping, pinching, or twisting of the wrist and requires no more than 5 pounds of force to operate. Lever-operated mechanisms, push-type mechanisms, and U-shaped handles are acceptable designs. Standards §§ 206.4, 206.5, 309.4, 404.2.7.

(4) Dining room door has knob hardware. Provide a door with hardware, mounted between 34 and 48 inches high, that is operable with one hand and does not require tight grasping, pinching, or twisting of the wrist and requires no more than 5 pounds of force to operate. Lever-operated mechanisms, push-type mechanisms, and U-shaped handles are acceptable designs. Standards §§ 206.4, 206.5, 309.4, 404.2.7.

(5) Nurses Station counter top is 52 inches above the finished floor with no lower or equivalent facilitation provided. Provide counters dispersed throughout the facility (dispersion is not required where only 1 counter is provided) on accessible routes such that each counter has a portion extending the same depth as the counter top and no more than 36 inches high. If a parallel approach is provided, the accessible portion of the counter shall be at least 36 inches long (unless the entire counter is less than 36 inches high) and have clear floor space positioned for a parallel approach; if a forward approach is provided, the accessible portion of the counter shall be at least 30 inches long and have knee and toe space provided under the counter and clear floor space positioned for a forward approach. Standards §§ 227.3, 305, 306, 904.4.

(6) Room #7 (non secured room) door has knob hardware. Provide a door with hardware, mounted between 34 and 48 inches high, that is operable with one hand and does not require tight grasping, pinching, or twisting of the wrist and requires no more than 5 pounds of force to operate. Lever-operated mechanisms, push-type mechanisms, and U-shaped handles are acceptable designs. Standards §§ 206.4, 206.5, 309.4, 404.2.7.

(7) The three secured rooms have standard toilets and lavatories that are not accessible to persons with disabilities. Provide at least one accessible secured room such that all of the room's elements, including door width, clear floor space, water closet, urinal (if provided), grab bars, lavatory, mirror (if provided), controls, and dispensers, comply with the Standards. Where only one room serves a particular purpose, such as a room serving a particular counseling room, it shall be accessible. Where multiple rooms are grouped together and serve the same purpose, at least one room shall be accessible. Standards § 806.2

(8) TV Room door has knob hardware. Provide a door with hardware, mounted between 34 and 48 inches high, that is operable with one hand and does not require tight grasping, pinching, or twisting of the wrist and requires no more than 5 pounds of force to operate.

Lever-operated mechanisms, push-type mechanisms, and U-shaped handles are acceptable designs. Standards §§ 206.4, 206.5, 309.4, 404.2.7.

(9) Treatment Room door has an opening width of 28 inches and it has knob hardware. Provide a door with hardware, mounted between 34 and 48 inches high, that is operable with one hand and does not require tight grasping, pinching, or twisting of the wrist and requires no more than 5 pounds of force to operate. Lever-operated mechanisms, push-type mechanisms, and U-shaped handles are acceptable designs. Standards §§ 206.4, 206.5, 309.4, 404.2.7.

(10) All third floor doors have knob hardware. Provide a door with hardware, mounted between 34 and 48 inches high, that is operable with one hand and does not require tight grasping, pinching, or twisting of the wrist and requires no more than 5 pounds of force to operate. Lever-operated mechanisms, push-type mechanisms, and U-shaped handles are acceptable designs. Standards §§ 206.4, 206.5, 309.4, 404.2.7.

vi. Toilet Rooms

(1) First Floor Men's

(a) The pressure required to open the entry door is 25 pounds and it has knob hardware. Provide a door that requires no more than 5 pounds of force to open (not including the initial force needed to overcome inertia, retracting bolts, etc.). Provide a door with hardware, mounted between 34 and 48 inches high, that is operable with one hand and does not require tight grasping, pinching, or twisting of the wrist and requires no more than 5 pounds of force to operate. Lever-operated mechanisms, push-type mechanisms, and U-shaped handles are acceptable designs. Standards §§ 206.4, 206.5, 309.4, 404.2.7, 404.2.9.

(b) The lavatory water supply and drain pipes are not insulated or otherwise configured to protect against contact and the faucet hardware requires tight grasping, pinching, or twisting of the wrist. Provide water supply and drain pipes insulated or otherwise configured to protect against contact. There shall be no sharp or abrasive surfaces underneath the lavatory or sink. Provide a lavatory with a faucet that can be operated with no more than 5 pounds of force and can be used with one hand and without tight grasping, pinching, or

twisting of the wrist (lever-operated, push-type, and electronically controlled mechanisms are examples of acceptable designs). Hand-operated metering faucets shall remain open for at least 10 seconds. Standards §§ 213.3.4, 309.4, 606.4, 606.5.

(c) The urinal elongated rim is 25 inches above the finished floor and the flush controls are mounted 54 inches above the finished floor. Provide a stall-type or a wall-hung urinal with a rim mounted 17 inches high or less; a depth of at least 13½ inches from the outer face to the rear of the urinal; a clear floor space at least 30 inches wide and 48 inches deep positioned for a forward approach; and a flush control between 15 and 48 inches high or an automatic flush. Standards §§ 213.3.3, 305, 308.2, 309.4, 605.

(d) No accessible toilet stall is provided. Provide an accessible toilet compartment at least 60 inches wide and at least 59 inches deep (or at least 56 inches deep with a wall-mounted toilet) such that all of the compartment's elements, including door, door hardware, toilet, size and arrangement, toe clearances, grab bars, controls, and dispensers, comply with the Standards. Standards §§ 213.3.1, 301.1, 404, 604, 604.8.1, 609.

(2) First Floor Women's

(a) The pressure required to open the door is 25 pounds and it has knob hardware. Provide a door that requires no more than 5 pounds of force to open (not including the initial force needed to overcome inertia, retracting bolts, etc.). Provide a door with hardware, mounted between 34 and 48 inches high, that is operable with one hand and does not require tight grasping, pinching, or twisting of the wrist and requires no more than 5 pounds of force to operate. Lever-operated mechanisms, push-type mechanisms, and U-shaped handles are acceptable designs. Standards §§ 206.4, 206.5, 309.4, 404.2.7, 404.2.9.

(b) The lavatory water supply and drain pipes are not insulated or otherwise configured to protect against contact and the faucet hardware requires tight grasping, pinching, or twisting of the wrist. Provide water supply and drain pipes insulated or otherwise configured to protect against contact. There shall be no sharp or abrasive surfaces underneath the lavatory or sink. Provide a lavatory with a faucet that can

be operated with no more than 5 pounds of force and can be used with one hand and without tight grasping, pinching, or twisting of the wrist (lever-operated, push-type, and electronically controlled mechanisms are examples of acceptable designs). Hand-operated metering faucets shall remain open for at least 10 seconds. Standards §§ 213.3.4, 309.4, 606.4, 606.5.

(c) No accessible toilet compartment is provided. Provide an accessible toilet compartment at least 60 inches wide and at least 59 inches deep (or at least 56 inches deep with a wall-mounted toilet) such that all of the compartment's elements, including door, door hardware, toilet, size and arrangement, toe clearances, grab bars, controls, and dispensers, comply with the Standards. Standards §§ 213.3.1, 301.1, 404, 604, 604.8.1, 609.

(d) The paper towel dispenser and the sanitary napkin dispenser protrude into the walkway and are not detectable to a blind person using a cane. Unless protected by a cane detectable barrier, objects with their leading edges between 27 inches and 80 inches high shall not protrude into circulation paths more than 4 inches for wall-mounted elements, or 12 inches for free standing post- or pylon-mounted elements. Protruding objects (and cane-detectable barriers) shall not reduce the clear width of accessible routes or maneuvering spaces below minimum requirements. Standards §§ 206, 307.

(3) Single user, Psych ER

(a) The pressure required to open the door is 15 pounds. Provide a door that requires no more than 5 pounds of force to open (not including the initial force needed to overcome inertia, retracting bolts, etc.). Standards §§ 206.5, 404.2.9.

(b) The toilet seat cover dispenser is mounted at 59 inches above the finished floor over the toilet. Operable parts and controls of this element shall be no more than 48 inches high for a forward reach, or no more than 44 inches high if over an obstruction between 20 and 25 inches deep (for a forward reach, obstructions may not be deeper than 25 inches and obstructions must allow knee space); or mounted not more than 48 inches high for a side reach, or no more than 46 inches high if over an obstruction between 10 and 24 inches deep (for a side reach, obstruction may

not be deeper than 24 inches); and accompanied by clear floor space of 30 inches by 48 inches that allows a forward or parallel approach, respectively, by a person using a wheelchair. Standards §§ 205.1, 305, 308.2, 308.3.

(c) The lavatory water supply and drain pipes are not insulated or otherwise configured to protect against contact. Provide water supply and drain pipes insulated or otherwise configured to protect against contact. There shall be no sharp or abrasive surfaces underneath the lavatory or sink. Standards §§ 213.3.4, 606.5.

(4) Single user, Strobe Wing

(a) No accessible mirror is provided. Provide at least one mirror such that, if it is mounted above a lavatory or countertop, it is mounted with the bottom edge of the reflecting surface no more than 40 inches high; or, if it is not mounted above a lavatory or countertop, it is mounted with the bottom edge of the reflecting surface no more than 35 inches high. Standards §§ 213.2, 603.3.

(b) No accessible coat hook is provided. Provide a coat hook between 15 and 48 inches high accompanied by clear floor space of 30 by 48 inches. Standards §§ 213.3.7, 305, 308, 603.4.

(c) The toilet clear floor space is obstructed by a trash receptacle. Provide clearance at the toilet that is at least 60 inches wide and 56 inches deep. This clearance may overlap with the toilet, grab bars, dispensers, sanitary napkin disposal, coat hooks, shelves, accessible routes, clear floor space and clearances for other fixtures, and turning space; but no other fixtures or obstructions, including lavatories, may be located within this clearance. Standards §§ 213.3.2, 604.3.

(5) 3rd Floor, Single User Men's

(a) The toilet room contains a number of inaccessible elements and is not accessible to people with disabilities. Provide an accessible toilet room such that all of the room's elements, including signage, door, door hardware, clear floor space, toilet, stall size and arrangement (if any), urinal (if provided), grab bars, lavatory, mirror, controls, and dispensers, comply with the Standards. Standards §§ 204,

205, 206, 213, 216, 225, 301.1, 401.1, 601.1, 703, 811.

(6) 3rd Floor, Single User Women's

(a) The toilet room contains a number of inaccessible elements and is not accessible to people with disabilities. Provide an accessible toilet room such that all of the room's elements, including signage, door, door hardware, clear floor space, toilet, stall size and arrangement (if any), urinal (if provided), grab bars, lavatory, mirror, controls, and dispensers, comply with the Standards. Standards §§ 204, 205, 206, 213, 216, 225, 301.1, 401.1, 601.1, 703, 811.

vii. Drinking Fountains

(1) 1st floor reception

(a) The wall-mounted drinking fountain does not have sufficient knee space clearance. Provide a drinking fountain with a clear floor space of at least 30 inches by 48 inches (36 inches by 48 inches if the unit is in an alcove more than 24 inches deep) positioned for a forward approach and centered on the unit. Knee clearance shall be at least 11 inches deep at 9 inches high and at least 8 inches deep at 27 inches high. Standards §§ 211, 305, 306, 602.2.

(b) No drinking fountain is provided for people who have difficulty bending or stooping. Provide 50% of all drinking fountains on each floor or exterior site with a spout outlet between 38 and 43 inches high and 50% of all drinking fountains on each floor or exterior site with a spout outlet no more than 36 inches high that otherwise complies with the Standards. At least one of each type shall be provided. Standards §§ 211, 602.4, 602.7.

(2) 2nd floor ER

(a) The wall-mounted drinking fountain does not have sufficient knee space clearance. Provide a drinking fountain with a clear floor space of at least 30 inches by 48 inches (36 inches by 48 inches if the unit is in an alcove more than 24 inches deep) positioned for a forward approach and centered on the unit. Knee clearance shall be at least 11 inches deep at 9 inches high and at least 8 inches deep at 27 inches high. Standards §§ 211, 305, 306, 602.2.

(b) No drinking fountain is provided for people who have difficulty bending or stooping. Provide 50% of all drinking fountains on each floor or exterior site with a spout outlet between 38 and 43 inches high and 50% of all drinking fountains on each floor or exterior site with a spout outlet no more than 36 inches high that otherwise complies with the Standards. At least one of each type shall be provided. Standards §§ 211, 602.4, 602.7.

(3) 2nd floor Strobe Wing. No drinking fountain is provided for people who have difficulty bending or stooping. Provide 50% of all drinking fountains on each floor or exterior site with a spout outlet between 38 and 43 inches high and 50% of all drinking fountains on each floor or exterior site with a spout outlet no more than 36 inches high that otherwise complies with the Standards. At least one of each type shall be provided. Standards §§ 211, 602.4, 602.7.

viii. Showers

(1) Strobe Wing Shower Room: no accessible shower is provided. Provide a fully accessible transfer or roll-in type shower compartment with the following features: controls that are operable with one hand, without tight grasping, pinching, or twisting of the wrist, that require no more than 5 pounds of force to operate; a shower spray unit with an on/off control with a non-positive shutoff and a hose at least 59 inches long that can be used both as a fixed shower head and as a hand-held shower and that delivers water no hotter than 120 degrees; a curb at the shower entrance that is no higher than ½ inch and, in roll-in showers, is beveled if higher than ¼ inch; enclosures, if any, that do not obstruct controls, faucets, or spray units and do not obstruct transfers from wheelchairs onto shower seats; and grab bars that comply with § 609. If the shower is transfer type, the compartment shall be 36 inches by 36 inches, the entrance shall be at least 36 inches wide, and clearance adjacent to the opening shall be 36 inches wide by 48 inches long measured from the control wall (so that the clearance extends beyond the seat); provide grab bars across the control wall and across the back wall to a point 18 inches from the control wall; provide a rectangular or L-shaped seat complying with § 610 between 17 and 19 inches high extending from the back wall to within 3 inches of the entry; and provide controls on the wall opposite the seat above the grab bar, between 38 and 48 inches high, on the open side of the compartment. If the shower is roll-in type, the compartment shall be 30 inches minimum by 60 inches minimum, the entrance shall be a minimum of 60 inches

wide (or a minimum of 36 inches wide at one end of the long side of the compartment), and clearance adjacent to the opening shall be at least 30 inches wide by 60 inches long; provide grab bars on three walls (unless a seat is provided, in which case grab bars shall be on two walls and there shall be no grab bar above the seat), 6 inches maximum from any adjacent wall; and provide controls mounted above the grab bar, no more than 48 inches high; if a seat is provided, it shall comply with § 610.3 and the controls shall be on the back wall adjacent to the seat within 27 inches of the seat wall (unless the shower opening is 36 inches long, in which case the controls can also be on the back wall opposite the seat). Standards §§ 213.3.6, 608, 609, 610.

(2) Strobe Wing in Unisex Toilet Room. The shower in this room is not accessible. Provide a fully accessible transfer or roll-in type shower compartment with the following features: controls that are operable with one hand, without tight grasping, pinching, or twisting of the wrist, that require no more than 5 pounds of force to operate; a shower spray unit with an on/off control with a non-positive shutoff and a hose at least 59 inches long that can be used both as a fixed shower head and as a hand-held shower and that delivers water no hotter than 120 degrees; a curb at the shower entrance that is no higher than ½ inch and, in roll-in showers, is beveled if higher than ¼ inch; enclosures, if any, that do not obstruct controls, faucets, or spray units and do not obstruct transfers from wheelchairs onto shower seats; and grab bars that comply with § 609. If the shower is transfer type, the compartment shall be 36 inches by 36 inches, the entrance shall be at least 36 inches wide, and clearance adjacent to the opening shall be 36 inches wide by 48 inches long measured from the control wall (so that the clearance extends beyond the seat); provide grab bars across the control wall and across the back wall to a point 18 inches from the control wall; provide a rectangular or L-shaped seat complying with § 610 between 17 and 19 inches high extending from the back wall to within 3 inches of the entry; and provide controls on the wall opposite the seat above the grab bar, between 38 and 48 inches high, on the open side of the compartment. If the shower is roll-in type, the compartment shall be 30 inches minimum by 60 inches minimum, the entrance shall be a minimum of 60 inches wide (or a minimum of 36 inches wide at one end of the long side of the compartment), and clearance adjacent to the opening shall be at least 30 inches wide by 60 inches long; provide grab bars on three walls (unless a seat is provided, in which case grab bars shall be on two walls and there shall be no grab bar above the seat), 6 inches maximum from any adjacent wall; and provide controls mounted above the grab bar, no

more than 48 inches high; if a seat is provided, it shall comply with § 610.3 and the controls shall be on the back wall adjacent to the seat within 27 inches of the seat wall (unless the shower opening is 36 inches long, in which case the controls can also be on the back wall opposite the seat). Standards §§ 213.3.6, 608, 609, 610.

b. Elections Division/ Public Works Land Use Division, 3033 H Street in Eureka

i. Accessible Route

(1) The building lacks the required directional signage indicating the accessible entrance. Provide accessible directional signage at inaccessible entrances directing users to the accessible entrance, and provide accessible signage with the International Symbol of Accessibility at all permanent accessible entrances. Standards §§ 216.6, 703.5, 703.7.2.1.

(2) Ramp

(a) The ramp has a slope of 18.7%, no edge protection, no level landing at the bottom, and no handrails. Provide a ramp that is at least 36 inches wide between handrails, with a slope not exceeding 8.33% and a cross slope not exceeding 2.08%; with level landings at least as wide as the ramp and 60 inches long at the top and bottom of every ramp run; with level landings at least 60 inches by 60 inches when the ramp changes direction; and with no changes in level other than the slope and cross-slope. The ramp shall have no run containing a rise greater than 30 inches. On each side of ramp runs and landings, provide edge protection that consists of either an extended ground surface at least 12 inches beyond the edge of the surface of the ramp or landing, or a curb or barrier that prevents the passage of a 4 inch diameter sphere where any part of the sphere is within 4 inches of the surface. On both sides of ramps with rises greater than 6 inches, provide handrails that have a diameter between 1¼ and 2 inches or a perimeter between 4 inches and 6¼ inches and a cross section of no more than 2¼ inches such that the handrails are continuous along the full length of the ramp run. Inside handrails on switchbacks or doglegs shall be continuous between runs; handrails shall have a continuous gripping surface extending at least 12 inches beyond the top and bottom of the ramp parallel with the ground surface; extensions shall return to the wall, guard, or landing surface (or continue on as handrails); handrails shall not rotate

within their fittings; handrails shall be mounted at a consistent height between 34 inches and 38 inches above the ramp surface and at least 1½ inches from the wall; gripping surfaces and adjacent surfaces shall be free of sharp or abrasive elements and have rounded edges; and gripping surfaces shall not be obstructed along their tops or sides and the bottoms shall not be obstructed for more than 20% of their length and have no horizontal projections occurring closer than 1½ inches from the bottom of the gripping surface (except that the distance between horizontal projections and the bottom of the gripping surface can be reduced by ⅛ inch for each ½ inch of handrail perimeter over 4 inches). If the ramp is subject to wet conditions, landings shall be designed to prevent the accumulation of water. Standards §§ 206.2, 405, 505.

(3) The door into the building has 10 inches of clear floor space on the latch side, in the pull direction. On the pull side of the door, provide maneuvering clearance at least 60 inches deep perpendicular to the doorway and at least 18 inches wide parallel to the doorway on the latch side. Standards §§ 206.5, 404.2.4.1.

(4) Elevator

(a) The elevator hall call buttons are centered at 54 inches above the finished floor and no visual signals are provided on the buttons to indicate that the call has been registered or answered. Provide hall (lobby) call buttons with visible signals indicating when each call is registered and when each call is answered. The call buttons shall be between 15 and 48 inches high (except that existing buttons can be 54 inches high); shall be at least ¾ inch in the smallest dimension, with the button designating the up direction on top; and the call buttons shall be raised or flush (except that existing buttons can be recessed). Standards §§ 206.6, 407.2.1.

(b) The elevator has no hall call lanterns. Provide hall signals (which may be in-car signals) at each hoistway entrance that emit a visible and audible signal indicating which car is answering a call and the direction of travel. Audible signals shall sound once for the up direction and twice for the down direction or have verbal annunciators indicating direction; and visible signals shall be at least 2½ inches tall, mounted with the centerline at least 72 inches high, and visible from the vicinity of the hall call button. Existing

elevators do not need to signal the direction of travel or comply with specific requirements for visible signals. Standards §§ 206.6, 407.2.2.

(c) The elevator lacks hoistway signs. Provide signage with raised and Braille floor designations on both jambs of hoistway entrances, mounted between 48 and 60 inches high, with characters at least 2 inches tall. Provide a tactile star on both jambs at the main entry level. Standards §§ 206.6, 407.2.3, 703.2, 703.3, 703.4.1.

(d) The elevator doors do not automatically re-open when in contact with an obstruction. Provide horizontal sliding doors that open and close automatically with a reopening device that will stop and reopen the car door and hoistway door automatically if the door becomes obstructed by an object or person. The device shall be capable of completing these operations without requiring contact for obstructions passing through the opening at heights of 5 inches and 29 inches; door reopening devices shall remain effective for at least 20 seconds, after which the doors may close; the minimum time from notification that a car is answering a call until the doors of that car start to close shall be 5 seconds; and the minimum time for elevator doors to remain fully open in response to a car call shall be 3 seconds. Standards §§ 206.6, 407.3.

(e) The elevator car call buttons do have Braille and raised characters, the main entry floor is not indicated by a raised star, and no emergency controls are provided. Provide car control buttons that are at least ¾ inch in their smallest dimension, are raised or flush, and are designated by Braille and raised characters. The call buttons for emergency stop, alarm, door open, door close, main entry floor, and phone shall be designated by symbols as required in § 407.4.7.1.3; all raised designations for control buttons shall be placed immediately to the left of the buttons to which they apply; floor buttons shall be provided with visual indicators to show that a call has been registered and shall extinguish when the car arrives at the floor; all buttons shall be between 15 and 48 inches high (or no more than 54 inches high if there are more than 16 floors or openings and a parallel approach is provided); and emergency controls, including the emergency alarm and emergency stop, shall be grouped at the bottom of the panel with their centerlines at least 35 inches high. Buttons shall be arranged with

numbers in ascending order and reading from left to right. Standards §§ 206.6, 407.4.6, 407.4.7, 703.2, 703.3.

(f) The elevator car position indicator does not emit an audible signal when the car passes or stops on a floor. Provide visual car position indicators with characters at least ½ inch high above the car control panel or over the door that show the position of the elevator in the hoistway. Indicators shall emit an audible and visual signal as the car passes or stops at a floor served by the elevator, with the corresponding floor designation being illuminated. Standards §§ 206.6, 407.4.8.

ii. Offices and Counters

(1) Room #20 - Elections. The door has knob hardware. Provide a door with hardware, mounted between 34 and 48 inches high, that is operable with one hand and does not require tight grasping, pinching, or twisting of the wrist and requires no more than 5 pounds of force to operate. Lever-operated mechanisms, push-type mechanisms, and U-shaped handles are acceptable designs. Standards §§ 206.4, 206.5, 309.4, 404.2.7.

(2) Conference Room B. The door has knob hardware. Provide a door with hardware that is easy to grasp with one hand and that does not require tight grasping, pinching, or twisting of the wrist to operate. Lever-operated mechanisms, push-type mechanisms, and U-shaped handles are acceptable designs. Standards § 4.13.9.

(3) Room #17 - Public Works. The door has knob hardware. Provide a door with hardware that is easy to grasp with one hand and that does not require tight grasping, pinching, or twisting of the wrist to operate. Lever-operated mechanisms, push-type mechanisms, and U-shaped handles are acceptable designs. Standards § 4.13.9.

iii. Toilet Rooms - First Floor

(1) Men's

(a) No accessible toilet room sign is provided. Provide a toilet or locker room sign with raised and Braille characters. Tactile signs shall be mounted on the wall adjacent to the latch side of the door or the nearest adjacent wall (except that signs can be mounted on the push side of doors with closers and without hold-open devices); mounted between 48 and 60 inches high; and located so that a clear floor

space of at least 18 inches by 18 inches, centered on the tactile characters, is provided beyond the arc of any door's swing between the closed and 45 degrees open positions. If not all toilet rooms are accessible, provide signage with the International Symbol of Accessibility at all accessible toilet rooms. Standards §§ 216.8, 703.

(b) The pressure required to open the door is 15 pounds and it has knob hardware. Provide a door that requires no more than 5 pounds of force to open (not including the initial force needed to overcome inertia, retracting bolts, etc.). Standards §§ 206.5, 404.2.9.

(c) The paper towel dispenser controls are mounted at 59 inches above the finished floor over the sink. Operable parts and controls of this element shall be no more than 48 inches high for a forward reach, or no more than 44 inches high if over an obstruction between 20 and 25 inches deep (for a forward reach, obstructions may not be deeper than 25 inches and obstructions must allow knee space); or mounted not more than 48 inches high for a side reach, or no more than 46 inches high if over an obstruction between 10 and 24 inches deep (for a side reach, obstruction may not be deeper than 24 inches); and accompanied by clear floor space of 30 inches by 48 inches that allows a forward or parallel approach, respectively, by a person using a wheelchair. Standards §§ 205.1, 305, 308.2, 308.3.

(d) The lavatory water supply and drain pipes are not insulated or otherwise configured to protect against contact. Provide water supply and drain pipes insulated or otherwise configured to protect against contact. There shall be no sharp or abrasive surfaces underneath the lavatory or sink. Standards §§ 213.3.4, 606.5.

(e) The urinal rim is 24 inches above the finished floor, and the flush controls are mounted 54 inches above the finished floor. Provide a stall-type or a wall-hung urinal with a rim mounted 17 inches high or less; a depth of at least 13½ inches from the outer face to the rear of the urinal; a clear floor space at least 30 inches wide and 48 inches deep positioned for a forward approach; and a flush control between 15 and 48 inches high or an automatic flush. Standards §§ 213.3.3, 305, 308.2, 309.4, 605.

(f) The toilet has insufficient clear floor space. Provide

clearance at the toilet that is at least 60 inches wide and 56 inches deep. This clearance may overlap with the toilet, grab bars, dispensers, sanitary napkin disposal, coat hooks, shelves, accessible routes, clear floor space and clearances for other fixtures, and turning space; but no other fixtures or obstructions, including lavatories, may be located within this clearance. Standards §§ 213.3.2, 604.3.

(g) The top of the toilet seat is 16 inches above the finished floor, and the toilet centerline is 21 inches from the side wall. Provide a toilet with the top of the seat 17 to 19 inches high. The seat shall not be sprung to return to a lifted position. Provide a toilet with its centerline between 16 and 18 inches from the near side wall. Standards §§ 213.3.2, 604.2, 604.4.

(h) The toilet paper dispenser is inaccessible because it is mounted less than 12 inches above the grab bar. Provide a toilet paper dispenser that is mounted with its centerline between 7 and 9 inches from the front of the toilet and with its outlet between 15 and 48 inches high with continuous paper flow that does not control delivery. The dispenser shall be mounted either at least 1½ inches below the side grab bar or at least 12 inches above the side grab bar. Standards §§ 213.3.2, 604.7, 609.3.

(i) The side grab bar at the toilet is obstructed by the toilet paper dispenser. Provide grab bars that have at least 1½ inches between the grab bar and any object projecting beside or below it and at least 12 inches between the grab bar and any object projecting above it. Standards §§ 213.3.2, 604.5, 609.3.

(j) The rear grab bar at the toilet is less than 36 inches long. Provide a rear grab bar that is at least 36 inches long (except where wall space does not permit it due to the location of a recessed fixture, in which case the grab bar may be 24 inches long and centered on the toilet), extending 12 inches from the toilet centerline on one side and 24 inches from the toilet centerline on the other side (except where an administrative authority requires flush controls to be located in a position that conflicts with the location of the rear grab bar, in which case the bar may be split or shifted to the open side). Standards §§ 213.3.2, 604.5.2.

(2) Women's

(a) No accessible toilet room sign is provided. Provide a toilet or locker room sign with raised and Braille characters. Tactile signs shall be mounted on the wall adjacent to the latch side of the door or the nearest adjacent wall (except that signs can be mounted on the push side of doors with closers and without hold-open devices); mounted between 48 and 60 inches high; and located so that a clear floor space of at least 18 inches by 18 inches, centered on the tactile characters, is provided beyond the arc of any door's swing between the closed and 45 degrees open positions. If not all toilet rooms are accessible, provide signage with the International Symbol of Accessibility at all accessible toilet rooms. Standards §§ 216.8, 703.

(b) The pressure required to open the door is 20 pounds and it has knob hardware. Provide a door that requires no more than 5 pounds of force to open (not including the initial force needed to overcome inertia, retracting bolts, etc.). Standards §§ 206.5, 404.2.9.

(c) The paper towel dispenser controls are mounted at 54 inches above the finished floor over the sink. Operable parts and controls of this element shall be no more than 48 inches high for a forward reach, or no more than 44 inches high if over an obstruction between 20 and 25 inches deep (for a forward reach, obstructions may not be deeper than 25 inches and obstructions must allow knee space); or mounted not more than 48 inches high for a side reach, or no more than 46 inches high if over an obstruction between 10 and 24 inches deep (for a side reach, obstruction may not be deeper than 24 inches); and accompanied by clear floor space of 30 inches by 48 inches that allows a forward or parallel approach, respectively, by a person using a wheelchair. Standards §§ 205.1, 305, 308.2, 308.3.

(d) The lavatory apron is 25 inches above the finished floor, no knee-toe clearance is provided, and the water supply and drain pipes are not insulated or otherwise configured to protect against contact. Provide a lavatory with the top of the rim or counter 34 inches high or less; knee clearance at least 30 inches wide, between 9 inches and 27 inches high, extending between 11 and 25 inches deep at 9 inches high, and extending at least 8 inches deep at 27 inches high; and toe clearance at least 30 inches wide and 9 inches high, and

extending between 17 and 25 inches deep under the lavatory. Provide water supply and drain pipes insulated or otherwise configured to protect against contact. There shall be no sharp or abrasive surfaces underneath the lavatory or sink. Standards §§ 213.3.4, 306, 606.2, 606.3, 606.5.

(e) The toilet has insufficient clear floor space. Provide clearance at the toilet that is at least 60 inches wide and 56 inches deep. This clearance may overlap with the toilet, grab bars, dispensers, sanitary napkin disposal, coat hooks, shelves, accessible routes, clear floor space and clearances for other fixtures, and turning space; but no other fixtures or obstructions, including lavatories, may be located within this clearance. Standards §§ 213.3.2, 604.3.

(f) The top of the toilet seat is 16 inches above the finished floor. Provide a toilet with the top of the seat 17 to 19 inches high. The seat shall not be sprung to return to a lifted position. Standards §§ 213.3.2, 604.4.

(g) The toilet is centerline is 21 inches from the side wall. Provide a toilet with its centerline between 16 and 18 inches from the near side wall. Standards §§ 213.3.2, 604.2.

(h) The toilet flush control is on the closed side. Provide a flush control mounted on the "open" side of the toilet's clear floor space, between 15 and 48 inches high, and requiring a maximum of 5 pounds of force to operate; or provide an automatic flush device. Standards §§ 213.3.2, 309.4, 604.6.

(i) No accessible coat hook is provided. Provide a coat hook or towel hook between 15 and 48 inches high accompanied by clear floor space of 30 by 48 inches. Standards §§ 213.3.7, 305, 308, 603.4.

(j) The toilet paper dispenser is mounted on the wall opposite the side grab bar. Provide a toilet paper dispenser that is mounted with its centerline between 7 and 9 inches from the front of the toilet and with its outlet between 15 and 48 inches high with continuous paper flow that does not control delivery. The dispenser shall be mounted either at least 1½ inches below the side grab bar or at least 12 inches above the side grab bar. Standards §§ 213.3.2, 604.7, 609.3.

(k) The rear grab bar at the toilet is less than 36 inches long. Provide a rear grab bar that is at least 36 inches long (except where wall space does not permit it due to the location of a recessed fixture, in which case the grab bar may be 24 inches long and centered on the toilet), extending 12 inches from the toilet centerline on one side and 24 inches from the toilet centerline on the other side (except where an administrative authority requires flush controls to be located in a position that conflicts with the location of the rear grab bar, in which case the bar may be split or shifted to the open side). Standards §§ 213.3.2, 604.5.2.

c. Community Development, 3015 H Street, Eureka

i. No Accessible Route into building

(1) The building front entrance is accessible only by stairs and no directional sign is provided indicating an alternate entrance. Provide accessible directional signage at inaccessible entrances directing users to the accessible entrance, and provide accessible signage with the International Symbol of Accessibility at all permanent accessible entrances. Standards §§ 216.6, 703.5, 703.7.2.1.

(2) The ramp at the rear of the building has a slope of 26.5%, has no edge protection, has no level landing at the bottom of the ramp, and no accessible handrails are provided. Provide a ramp that is at least 36 inches wide between handrails, with a slope not exceeding 8.33% and a cross slope not exceeding 2.08%; with level landings at least as wide as the ramp and 60 inches long at the top and bottom of every ramp run; with level landings at least 60 inches by 60 inches when the ramp changes direction; and with no changes in level other than the slope and cross-slope. The ramp shall have no run containing a rise greater than 30 inches. On each side of ramp runs and landings, provide edge protection that consists of either an extended ground surface at least 12 inches beyond the edge of the surface of the ramp or landing, or a curb or barrier that prevents the passage of a 4 inch diameter sphere where any part of the sphere is within 4 inches of the surface. On both sides of ramps with rises greater than 6 inches, provide handrails that have a diameter between 1¼ and 2 inches or a perimeter between 4 inches and 6¼ inches and a cross section of no more than 2¼ inches such that the handrails are continuous along the full length of the ramp run. Inside handrails on switchbacks or doglegs shall

be continuous between runs; handrails shall have a continuous gripping surface extending at least 12 inches beyond the top and bottom of the ramp parallel with the ground surface; extensions shall return to the wall, guard, or landing surface (or continue on as handrails); handrails shall not rotate within their fittings; handrails shall be mounted at a consistent height between 34 inches and 38 inches above the ramp surface and at least 1½ inches from the wall; gripping surfaces and adjacent surfaces shall be free of sharp or abrasive elements and have rounded edges; and gripping surfaces shall not be obstructed along their tops or sides and the bottoms shall not be obstructed for more than 20% of their length and have no horizontal projections occurring closer than 1½ inches from the bottom of the gripping surface (except that the distance between horizontal projections and the bottom of the gripping surface can be reduced by ⅛ inch for each ½ inch of handrail perimeter over 4 inches). If the ramp is subject to wet conditions, landings shall be designed to prevent the accumulation of water. Standards §§ 206.2, 405, 505.

ii. The interior room signage provided is inaccessible. Provide permanent room signage meeting the requirements of the Standards for raised characters, visual characters, and pictograms; accompanied by Grade 2 Braille. Tactile signs shall be mounted between 48 and 60 inches high on the wall adjacent to the latch side of the door or on the nearest adjacent wall (except that signs can be mounted on the inactive leaf of a double door or on the push side of doors with closers and without hold-open devices); and shall be located so that a clear floor space of at least 18 inches by 18 inches, centered on the tactile characters, is provided beyond the arc of any door's swing between the closed and 45 degrees open positions. Standards §§ 216, 703.

iii. Brochure counter is 41 inches above the finished floor. Provide counters dispersed throughout the facility (dispersion is not required where only 1 counter is provided) on accessible routes such that each counter has a portion extending the same depth as the counter top and no more than 36 inches high. If a parallel approach is provided, the accessible portion of the counter shall be at least 36 inches long (unless the entire counter is less than 36 inches high) and have clear floor space positioned for a parallel approach; if a forward approach is provided, the accessible portion of the counter shall be at least 30 inches long and have knee and toe space provided under the counter and clear floor space positioned for a forward approach. Standards §§ 227.3, 305, 306, 904.4.

iv. Drinking Fountain

(1) The drinking fountain has a spout that is 44 inches above the

finished floor and has no knee clearance. Provide 50% of all drinking fountains on each floor or exterior site with a spout outlet between 38 and 43 inches high and 50% of all drinking fountains on each floor or exterior site with a spout outlet no more than 36 inches high that otherwise complies with the Standards. At least one of each type shall be provided. Provide a drinking fountain with a clear floor space of at least 30 inches by 48 inches (36 inches by 48 inches if the unit is in an alcove more than 24 inches deep) positioned for a forward approach and centered on the unit. Knee clearance shall be at least 11 inches deep at 9 inches high and at least 8 inches deep at 27 inches high. Standards §§ 211, 305, 306, 602.2, 602.4, 602.7.

d. Hope Center (formerly Adult Day Treatment Center), 2933 H Street, Eureka

i. Accessible Route

(1) The building lacks directional signs indicating the location of the accessible entrance. Provide accessible directional signage at inaccessible entrances directing users to the accessible entrance, and provide accessible signage with the International Symbol of Accessibility at all permanent accessible entrances. Standards §§ 216.6, 703.5, 703.7.2.1.

(2) Ramp

(a) The ramp has a slope of 10% and no accessible handrails are provided. Provide a ramp that is at least 36 inches wide between handrails, with a slope not exceeding 8.33% and a cross slope not exceeding 2.08%; with level landings at least as wide as the ramp and 60 inches long at the top and bottom of every ramp run. On both sides of ramps with rises greater than 6 inches, provide handrails that have a diameter between 1¼ and 2 inches or a perimeter between 4 inches and 6¼ inches and a cross section of no more than 2¼ inches such that the handrails are continuous along the full length of the ramp run. Inside handrails on switchbacks or doglegs shall be continuous between runs; handrails shall have a continuous gripping surface extending at least 12 inches beyond the top and bottom of the ramp parallel with the ground surface; extensions shall return to the wall, guard, or landing surface (or continue on as handrails); handrails shall not rotate within their fittings; handrails shall be mounted at a consistent height between 34 inches and 38 inches above the ramp surface and at least

1½ inches from the wall; gripping surfaces and adjacent surfaces shall be free of sharp or abrasive elements and have rounded edges; and gripping surfaces shall not be obstructed along their tops or sides and the bottoms shall not be obstructed for more than 20% of their length and have no horizontal projections occurring closer than 1½ inches from the bottom of the gripping surface (except that the distance between horizontal projections and the bottom of the gripping surface can be reduced by ⅛ inch for each ½ inch of handrail perimeter over 4 inches). If the ramp is subject to wet conditions, landings shall be designed to prevent the accumulation of water. Standards §§ 206.2, 405, 505.

ii. Not all permanent rooms have accessible signage. Provide permanent room signage meeting the requirements of the Standards for raised characters, visual characters, and pictograms; accompanied by Grade 2 Braille. Tactile signs shall be mounted between 48 and 60 inches high on the wall adjacent to the latch side of the door or on the nearest adjacent wall (except that signs can be mounted on the inactive leaf of a double door or on the push side of doors with closers and without hold-open devices); and shall be located so that a clear floor space of at least 18 inches by 18 inches, centered on the tactile characters, is provided beyond the arc of any door's swing between the closed and 45 degrees open positions. Standards §§ 216, 703.

iii. Offices and Counters

(1) Multi-purpose room

(a) The faucet hardware on the kitchen sink requires tight grasping, pinching or twisting of the wrist. Provide a lavatory with a faucet that can be operated with no more than 5 pounds of force and can be used with one hand and without tight grasping, pinching, or twisting of the wrist (lever-operated, push-type, and electronically controlled mechanisms are examples of acceptable designs). Hand-operated metering faucets shall remain open for at least 10 seconds. Standards §§ 213.3.4, 309.4, 606.4.

(b) The paper towel dispenser is mounted 61 inches above the finished floor. Operable parts and controls of this element shall be between 15 and 48 inches high and accompanied by clear floor space of 30 by 48 inches that allows a forward or parallel approach by a person using a wheelchair. Standards §§ 205.1, 305, 308.2, 308.3, 309.

(c) The soap dispenser is mounted 43" over a counter. Operable parts and controls of this element shall be no more than 48 inches high for a forward reach, or no more than 44 inches high if over an obstruction between 20 and 25 inches deep (for a forward reach, obstructions may not be deeper than 25 inches and obstructions must allow knee space); or mounted not more than 48 inches high for a side reach, or no more than 46 inches high if over an obstruction between 10 and 24 inches deep (for a side reach, obstruction may not be deeper than 24 inches); and accompanied by clear floor space of 30 inches by 48 inches that allows a forward or parallel approach, respectively, by a person using a wheelchair. Standards §§ 205.1, 305, 308.2, 308.3.

iv. Single User Toilet Rooms

(1) Men's

(a) The lavatory hot water and drain pipes are not insulated or otherwise configured to protect against contact. Provide water supply and drain pipes insulated or otherwise configured to protect against contact. There shall be no sharp or abrasive surfaces underneath the lavatory or sink. Standards §§ 213.3.4, 606.5.

(2) Women's

(a) The lavatory hot water and drain pipes are not insulated or otherwise configured to protect against contact. Provide water supply and drain pipes insulated or otherwise configured to protect against contact. There shall be no sharp or abrasive surfaces underneath the lavatory or sink. Standards §§ 213.3.4, 606.5.

v. Drinking Fountain

(1) No drinking fountain provided for people who have difficulty bending or stooping. Provide 50% of all drinking fountains on each floor or exterior site with a spout outlet between 38 and 43 inches high and 50% of all drinking fountains on each floor or exterior site with a spout outlet no more than 36 inches high that otherwise complies with the Standards. At least one of each type shall be provided. Standards §§ 211, 602.4, 602.7.

(2) The clear floor space of the drinking fountain is obstructed by a trash receptacle. Provide a drinking fountain with a clear floor space of at least 30 inches by 48 inches (36 inches by 48 inches if the unit is in an alcove more than 24 inches deep) positioned for a forward approach and centered on the unit. Knee clearance shall be at least 11 inches deep at 9 inches high and at least 8 inches deep at 27 inches high. Standards §§ 211, 305, 306, 602.2.

e. Coroner's Office, 3012 I Street, Eureka

i. The route from the surface parking lot to the front entrance has a slope of 6.8%. To each area, feature, or element described, provide at least one accessible route that coincides with or is located in the same area as general circulation paths. The accessible route must have a minimum clear width of 36 inches (except that it may narrow to no less than 32 inches for a length of no more than 24 inches), or a minimum clear width of 42 inches if there is a U-turn around an obstruction less than 48 inches wide; have passing spaces at least every 200 feet; have a minimum clear headroom of 80 inches; have a surface that is firm, stable, and slip resistant; have, in the absence of a curb ramp, ramp, elevator, or platform lift, no level changes in excess of ½ inch vertically; have no level changes greater than ¼ inch vertically unless they are beveled with a slope no greater than 50%; and have a running slope no greater than 5% (or have been constructed as a fully accessible ramp) and a cross slope no greater than 2.08%. Standards §§ 206, 301.1, 401.1.

ii. The front entry door thumb latch hardware used requires tight grasping and pinching of the wrist. Provide a door with hardware, mounted between 34 and 48 inches high, that is operable with one hand and does not require tight grasping, pinching, or twisting of the wrist and requires no more than 5 pounds of force to operate. Lever-operated mechanisms, push-type mechanisms, and U-shaped handles are acceptable designs. Standards §§ 206.4, 206.5, 309.4, 404.2.7.

iii. Administrative office

(1) The door has knob hardware. Provide a door with hardware, mounted between 34 and 48 inches high, that is operable with one hand and does not require tight grasping, pinching, or twisting of the wrist and requires no more than 5 pounds of force to operate. Lever-operated mechanisms, push-type mechanisms, and U-shaped handles are acceptable designs. Standards §§ 206.4, 206.5, 309.4, 404.2.7.

(2) The pressure required to open the door is 20 pounds. Provide a door that requires no more than 5 pounds of force to open (not

including the initial force needed to overcome inertia, retracting bolts, etc.). Standards §§ 206.5, 404.2.9.

(3) The door has 14 inches of clear floor space on the latch side in the pull direction. On the pull side of the door, provide maneuvering clearance at least 60 inches deep perpendicular to the doorway and at least 18 inches wide parallel to the doorway on the latch side. Standards §§ 206.5, 404.2.4.1.

iv. Single user toilet. The toilet room contains a number of inaccessible elements and is not accessible to people with disabilities. Provide an accessible toilet room such that all of the room's elements, including signage, door, door hardware, clear floor space, toilet, stall size and arrangement (if any), urinal (if provided), grab bars, lavatory, mirror, controls, and dispensers, comply with the Standards. Standards §§ 204, 205, 206, 213, 216, 225, 301.1, 401.1, 601.1, 703, 811.

f. Within 9 months of entry of the Consent Decree, the County will complete the following modifications to the Administration Building, 3015 H Street, Eureka

i. No designated accessible parking is provided. On the shortest accessible route to the accessible entrance, provide 1 van accessible space designated as reserved for people with disabilities. Van accessible spaces shall be at least 132 inches wide and served by access aisles at least 60 inches wide, or at least 96 inches wide and served by access aisles at least 96 inches wide. Access aisles shall extend the full length of the parking spaces they serve and shall be marked so as to discourage parking in them. At sites with 5 or more parking spaces, provide vertical signs with the International Symbol of Accessibility at all spaces designated as reserved for persons with disabilities, mounted at least 60 inches high to the bottom of the sign. At van accessible spaces, provide an additional "van accessible" sign mounted at least 60 inches high to the bottom of the sign. All spaces and access aisles for persons with disabilities shall contain no changes in level, with slopes and cross-slopes not exceeding 2.08%, and their surfaces shall be firm, stable, and slip-resistant. If the parking facility does not serve a particular building or facility, provide accessible parking on the shortest accessible route to an accessible pedestrian entrance of the parking facility. If the parking facility serves a building with multiple accessible entrances or multiple buildings or facilities, provide dispersed parking spaces located on an accessible route closest to the accessible entrances. If the parking facility is a parking garage or otherwise has limitations on vertical clearances, provide minimum vertical clearance of 98 inches at the van accessible parking spaces and along at least one vehicle access route to such spaces from site entrances and exits. Standards §§ 208, 302, 502, 703.7.2.1.

ii. Accessible Route

(1) The door into the building has 13 inches of clear floor space on the latch side in the pull direction. On the pull side of the door, provide maneuvering clearance at least 60 inches deep perpendicular to the doorway and at least 18 inches wide parallel to the doorway on the latch side. Standards §§ 206.5, 404.2.4.1.

(2) No accessible room signs are provided. Provide permanent room signage meeting the requirements of the Standards for raised characters, visual characters, and pictograms; accompanied by Grade 2 Braille. Tactile signs shall be mounted between 48 and 60 inches high on the wall adjacent to the latch side of the door or on the nearest adjacent wall (except that signs can be mounted on the inactive leaf of a double door or on the push side of doors with closers and without hold-open devices); and shall be located so that a clear floor space of at least 18 inches by 18 inches, centered on the tactile characters, is provided beyond the arc of any door's swing between the closed and 45 degrees open positions. Standards §§ 216, 703.

(3) Ramp

(a) The ramp has a slope of 9.9%, the level landing at the top of the ramp is 60 inches by 50 inches, and no accessible handrails are provided. Provide a ramp with a slope not exceeding 8.33% and a cross slope not exceeding 2.08%; with level landings at least as wide as the ramp and 60 inches long at the top and bottom of every ramp run. On both sides of ramps with rises greater than 6 inches, provide handrails that have a diameter between 1¼ and 2 inches or a perimeter between 4 inches and 6¼ inches and a cross section of no more than 2¼ inches such that the handrails are continuous along the full length of the ramp run. Inside handrails on switchbacks or doglegs shall be continuous between runs; handrails shall have a continuous gripping surface extending at least 12 inches beyond the top and bottom of the ramp parallel with the ground surface; extensions shall return to the wall, guard, or landing surface (or continue on as handrails); handrails shall not rotate within their fittings; handrails shall be mounted at a consistent height between 34 inches and 38 inches above the ramp surface and at least 1½ inches from the wall; gripping surfaces and adjacent surfaces shall be free of sharp or abrasive elements and have rounded edges; and gripping surfaces shall not be obstructed along their

tops or sides and the bottoms shall not be obstructed for more than 20% of their length and have no horizontal projections occurring closer than 1½ inches from the bottom of the gripping surface (except that the distance between horizontal projections and the bottom of the gripping surface can be reduced by ⅛ inch for each ½ inch of handrail perimeter over 4 inches). If the ramp is subject to wet conditions, landings shall be designed to prevent the accumulation of water. Standards §§ 206.2, 405, 505.

iii. Toilet Room- The toilet room single user toilet room contains a number of inaccessible elements and is not accessible to people with disabilities. Provide an accessible toilet room such that all of the room's elements, including signage, door, door hardware, clear floor space, toilet, stall size and arrangement (if any), urinal (if provided), grab bars, lavatory, mirror, controls, and dispensers, comply with the Standards. Standards §§ 204, 205, 206, 213, 216, 225, 301.1, 401.1, 601.1, 703, 811.

g. Within 9 months of the entry of the Consent Decree, the County will complete the following modifications to the Case Management Building, 2932 H Street, Eureka

i. Accessible Route

(1) The building lacks the required directional sign indicating the location of the accessible entrance. Provide accessible directional signage at inaccessible entrances directing users to the accessible entrance, and provide accessible signage with the International Symbol of Accessibility at all permanent accessible entrances. Standards §§ 216.6, 703.5, 703.7.2.1.

(2) The door at the ramped entrance has an opening width of 30 inches and 7 inches of clear floor space on the latch side in the pull direction. Provide a door with a clear opening at least 32 inches wide, measured between the face of the door and the opposite stop, when the door is open 90 degrees. On the pull side of the door, provide maneuvering clearance at least 60 inches deep perpendicular to the doorway and provide a minimum of at least 18 inches wide parallel to the doorway on the latch side. Standards §§ 206.4, 206.5, 404.2.3, 404.2.4.2, 404.3.2.

(3) Ramp

(a) The ramp has a slope of 8.5%, no edge protection is provided, and no accessible handrails are provided. Provide a ramp that is at least 36 inches wide between handrails, with a slope not exceeding 8.33% and a cross

slope not exceeding 2.08. On each side of ramp runs and landings, provide edge protection that consists of either an extended ground surface at least 12 inches beyond the edge of the surface of the ramp or landing, or a curb or barrier that prevents the passage of a 4 inch diameter sphere where any part of the sphere is within 4 inches of the surface. On both sides of ramps with rises greater than 6 inches, provide handrails that have a diameter between 1¼ and 2 inches or a perimeter between 4 inches and 6¼ inches and a cross section of no more than 2¼ inches such that the handrails are continuous along the full length of the ramp run. Inside handrails on switchbacks or doglegs shall be continuous between runs; handrails shall have a continuous gripping surface extending at least 12 inches beyond the top and bottom of the ramp parallel with the ground surface; extensions shall return to the wall, guard, or landing surface (or continue on as handrails); handrails shall not rotate within their fittings; handrails shall be mounted at a consistent height between 34 inches and 38 inches above the ramp surface and at least 1½ inches from the wall; gripping surfaces and adjacent surfaces shall be free of sharp or abrasive elements and have rounded edges; and gripping surfaces shall not be obstructed along their tops or sides and the bottoms shall not be obstructed for more than 20% of their length and have no horizontal projections occurring closer than 1½ inches from the bottom of the gripping surface (except that the distance between horizontal projections and the bottom of the gripping surface can be reduced by ⅛ inch for each ½ inch of handrail perimeter over 4 inches). If the ramp is subject to wet conditions, landings shall be designed to prevent the accumulation of water. Standards §§ 206.2, 405, 505.

(4) Throughout the facility the doors have knob hardware. Provide a door with hardware, mounted between 34 and 48 inches high, that is operable with one hand and does not require tight grasping, pinching, or twisting of the wrist and requires no more than 5 pounds of force to operate. Lever-operated mechanisms, push-type mechanisms, and U-shaped handles are acceptable designs. Standards §§ 206.4, 206.5, 309.4, 404.2.7.

ii. Kitchen. The sink faucet hardware requires tight grasping, pinching or twisting of the wrist, and the clear floor space under the sink is obstructed by a trash receptacle. Provide a lavatory with a faucet that can be operated with no more than 5 pounds of force and can be used with one hand and without tight grasping, pinching, or twisting of the wrist (lever-operated,

push-type, and electronically controlled mechanisms are examples of acceptable designs). Hand-operated metering faucets shall remain open for at least 10 seconds. Provide a lavatory with clear floor space at least 30 inches wide by 48 inches deep positioned for a forward approach. Standards §§ 213.3.4, 305, 309.4, 606.

iii. Single User Toilet Room. The toilet room contains a number of inaccessible elements and is not accessible to people with disabilities. Provide an accessible toilet room such that all of the room's elements, including signage, door, door hardware, clear floor space, toilet, stall size and arrangement (if any), urinal (if provided), grab bars, lavatory, mirror, controls, and dispensers, comply with the Standards. Standards §§ 204, 205, 206, 213, 216, 225, 301.1, 401.1, 601.1, 703, 811.

h. Within 15 months of entry of the Consent Decree, the County will complete the following modifications to the Healthy Mom's Facility, 2944 D Street, Eureka

i. Parking. Parking: Parking: No van accessible parking space is provided. Provide a van accessible parking space that is a minimum of 132 inches wide and served by an access aisle at least 60 inches wide, or a minimum of 96 inches wide and served by an access aisle at least 96 inches wide; and designated by a vertical sign with the International Symbol of Accessibility and an additional "van accessible" sign mounted at least 60 inches high to the bottom of the signs (unless there are 4 or fewer total parking spaces, in which case, signage is not required). The space and access aisle shall contain no changes in level, with slopes and cross-slopes not exceeding 2.08%, and shall have surfaces that are firm, stable, and slip-resistant; and the access aisle shall be marked so as to discourage parking in it. Standards §§ 208, 302, 502.

ii. Accessible Route

(1) The front entrance door has knob. Provide a door with hardware, mounted between 34 and 48 inches high, that is operable with one hand and does not require tight grasping, pinching, or twisting of the wrist and requires no more than 5 pounds of force to operate. Lever-operated mechanisms, push-type mechanisms, and U-shaped handles are acceptable designs. Standards §§ 206.4, 206.5, 309.4, 404.2.7.

(2) The ramp slope is 10.6%, the landing at the top is 40 inches by 48 inches, and no accessible handrails are provided. Provide a ramp that is at least 36 inches wide between handrails, with a slope not exceeding 8.33% and a cross slope not exceeding 2.08%; with level landings at least as wide as the ramp and 60 inches long at the top and bottom of every ramp run; with level landings at least 60

inches by 60 inches when the ramp changes direction; and with no changes in level other than the slope and cross-slope. The ramp shall have no run containing a rise greater than 30 inches. On each side of ramp runs and landings, provide edge protection that consists of either an extended ground surface at least 12 inches beyond the edge of the surface of the ramp or landing, or a curb or barrier that prevents the passage of a 4 inch diameter sphere where any part of the sphere is within 4 inches of the surface. On both sides of ramps with rises greater than 6 inches, provide handrails that have a diameter between 1¼ and 2 inches or a perimeter between 4 inches and 6¼ inches and a cross section of no more than 2¼ inches such that the handrails are continuous along the full length of the ramp run. Inside handrails on switchbacks or doglegs shall be continuous between runs; handrails shall have a continuous gripping surface extending at least 12 inches beyond the top and bottom of the ramp parallel with the ground surface; extensions shall return to the wall, guard, or landing surface (or continue on as handrails); handrails shall not rotate within their fittings; handrails shall be mounted at a consistent height between 34 inches and 38 inches above the ramp surface and at least 1½ inches from the wall; gripping surfaces and adjacent surfaces shall be free of sharp or abrasive elements and have rounded edges; and gripping surfaces shall not be obstructed along their tops or sides and the bottoms shall not be obstructed for more than 20% of their length and have no horizontal projections occurring closer than 1½ inches from the bottom of the gripping surface (except that the distance between horizontal projections and the bottom of the gripping surface can be reduced by ⅛ inch for each ½ inch of handrail perimeter over 4 inches). If the ramp is subject to wet conditions, landings shall be designed to prevent the accumulation of water. Standards §§ 206.2, 405, 505.

(3) The doors throughout the facility have knob hardware. Provide doors with hardware, mounted between 34 and 48 inches high, that are operable with one hand and does not require tight grasping, pinching, or twisting of the wrist and requires no more than 5 pounds of force to operate. Lever-operated mechanisms, push-type mechanisms, and U-shaped handles are acceptable designs. Standards §§ 206.4, 206.5, 309.4, 404.2.7.

iii. Offices and Counters

(1) The door to the Recreation Room has an opening width of 28 inches. Provide a door with a clear opening at least 32 inches wide, measured between the face of the door and the opposite stop, when the door is open 90 degrees. Standards §§ 206.4, 206.5,

404.2.3.

(2) The door to the Family Visitation Room has an opening width of 30 inches. Provide a door with a clear opening at least 32 inches wide, measured between the face of the door and the opposite stop, when the door is open 90 degrees. Standards §§ 206.4, 206.5, 404.2.3.

iv. Designated Accessible Toilet Room

(1) No accessible toilet room sign is provided. Provide a toilet or locker room sign with raised and Braille characters. Tactile signs shall be mounted on the wall adjacent to the latch side of the door or the nearest adjacent wall (except that signs can be mounted on the push side of doors with closers and without hold-open devices); mounted between 48 and 60 inches high; and located so that a clear floor space of at least 18 inches by 18 inches, centered on the tactile characters, is provided beyond the arc of any door's swing between the closed and 45 degrees open positions. If not all toilet rooms are accessible, provide signage with the International Symbol of Accessibility at all accessible toilet rooms. Standards §§ 216.8, 703.

(2) The toilet seat cover dispenser controls are mounted at 57 inches above the finished floor over the toilet. Operable parts and controls of this element shall be between 15 and 48 inches high and accompanied by clear floor space of 30 by 48 inches that allows a forward or parallel approach by a person using a wheelchair. Standards §§ 205.1, 305, 308.2, 308.3, 309.

(3) The lavatory hot water and drain pipes are not insulated or otherwise configured to protect against contact. Provide water supply and drain pipes insulated or otherwise configured to protect against contact. There shall be no sharp or abrasive surfaces underneath the lavatory or sink. Standards §§ 213.3.4, 606.5.

(4) The toilet flush control is on the closed side. Provide a flush control mounted on the "open" side of the toilet's clear floor space, between 15 and 48 inches high, and requiring a maximum of 5 pounds of force to operate; or provide an automatic flush device. Standards §§ 213.3.2, 309.4, 604.6.

(5) The rear grab bar is obstructed. Provide grab bars that have at least 1½ inches between the grab bar and any object projecting beside or below it and at least 12 inches between the grab bar and any object projecting above it. Standards §§ 213.3.2, 604.5, 609.3.

i. Within 9 months of entry of the Consent Decree, the County will complete the following modifications to the Children's Shelter, 2956 D Street, Eureka

i. Parking: No van accessible parking space is provided. Provide a van accessible parking space that is a minimum of 132 inches wide and served by an access aisle at least 60 inches wide, or a minimum of 96 inches wide and served by an access aisle at least 96 inches wide; and designated by a vertical sign with the International Symbol of Accessibility and an additional "van accessible" sign mounted at least 60 inches high to the bottom of the signs (unless there are 4 or fewer total parking spaces, in which case, signage is not required). The space and access aisle shall contain no changes in level, with slopes and cross-slopes not exceeding 2.08%, and shall have surfaces that are firm, stable, and slip-resistant; and the access aisle shall be marked so as to discourage parking in it. Standards §§ 208, 302, 502.

ii. Accessible Route

(1) The landing at the top of the ramp is 50 inches by 44 inches, the handrail provided is inaccessible, and handrails are not on both sides of the ramp. Provide a ramp with level landings at least as wide as the ramp and 60 inches long at the top and bottom of every ramp run. On both sides of ramps with rises greater than 6 inches, provide handrails that have a diameter between 1¼ and 2 inches or a perimeter between 4 inches and 6¼ inches and a cross section of no more than 2¼ inches such that the handrails are continuous along the full length of the ramp run. handrails shall have a continuous gripping surface extending at least 12 inches beyond the top and bottom of the ramp parallel with the ground surface; extensions shall return to the wall, guard, or landing surface (or continue on as handrails); handrails shall not rotate within their fittings; handrails shall be mounted at a consistent height between 34 inches and 38 inches above the ramp surface and at least 1½ inches from the wall; gripping surfaces and adjacent surfaces shall be free of sharp or abrasive elements and have rounded edges; and gripping surfaces shall not be obstructed along their tops or sides and the bottoms shall not be obstructed for more than 20% of their length and have no horizontal projections occurring closer than 1½ inches from the bottom of the gripping surface (except that the distance between horizontal projections and the bottom of the gripping surface can be reduced by ⅛ inch for each ½ inch of handrail perimeter over 4 inches). If the ramp is subject to wet conditions, landings shall be designed to prevent the accumulation of water. Standards §§ 206.2, 405, 505.

(2) The front entry door does not have sufficient clear floor space on the latch side in the pull direction. On the pull side of the door provide maneuvering clearance at least 60 inches deep perpendicular to the doorway and at least 18 inches wide parallel to the doorway on the latch side. Standards §§ 206.5, 404.2.4.1.

(3) The doors throughout the facility have knob hardware. Provide doors with hardware, mounted between 34 and 48 inches high, that are operable with one hand and does not require tight grasping, pinching, or twisting of the wrist and requires no more than 5 pounds of force to operate. Lever-operated mechanisms, push-type mechanisms, and U-shaped handles are acceptable designs. Standards §§ 206.4, 206.5, 309.4, 404.2.7.

(4) No permanent room signage is provided throughout the facility. Provide permanent room signage meeting the requirements of the Standards for raised characters, visual characters, and pictograms; accompanied by Grade 2 Braille. Tactile signs shall be mounted between 48 and 60 inches high on the wall adjacent to the latch side of the door or on the nearest adjacent wall (except that signs can be mounted on the inactive leaf of a double door or on the push side of doors with closers and without hold-open devices); and shall be located so that a clear floor space of at least 18 inches by 18 inches, centered on the tactile characters, is provided beyond the arc of any door's swing between the closed and 45 degrees open positions. Standards §§ 216, 703.

iii. Reception Counter: The top of the counter is 42 inches above the finished floor. Provide counters dispersed throughout the facility (dispersion is not required where only 1 counter is provided) on accessible routes such that each counter has a portion extending the same depth as the counter top and no more than 36 inches high. If a parallel approach is provided, the accessible portion of the counter shall be at least 36 inches long (unless the entire counter is less than 36 inches high) and have clear floor space positioned for a parallel approach; if a forward approach is provided, the accessible portion of the counter shall be at least 30 inches long and have knee and toe space provided under the counter and clear floor space positioned for a forward approach. Standards §§ 227.3, 305, 306, 904.4.

iv. Kitchen. No knee space is provided at the kitchen sink. Provide at least 5% of all lavatories and sinks with the top of the rim or counter 34 inches high or less; knee clearance at least 30 inches wide, between 9 inches and 27 inches high, extending between 11 and 25 inches deep at 9 inches high, and extending at least 8 inches deep at 27 inches high; and toe clearance at least 30 inches wide and 9 inches high, and extending between 17 and 25

inches deep under the lavatory; water supply and drain pipes insulated or otherwise configured to protect against contact; no sharp or abrasive surfaces underneath; clear floor space at least 30 inches wide by 48 inches deep positioned for a forward approach (except that a parallel approach with no knee and toe clearance can be provided at a kitchen sink where there is no cook top or conventional range and at wet bars); and a faucet that can be operated with no more than 5 pounds of force and can be used with one hand and without tight grasping, pinching, or twisting of the wrist (lever-operated, push-type, and electronically controlled mechanisms are examples of acceptable designs). Hand-operated metering faucets shall remain open for at least 10 seconds. Standards §§ 213.3.4, 305, 306, 309, 606.

v. Men's Toilet and Shower Room

(1) No accessible toilet room sign is provided. Provide a toilet or locker room sign with raised and Braille characters. Tactile signs shall be mounted on the wall adjacent to the latch side of the door or the nearest adjacent wall (except that signs can be mounted on the push side of doors with closers and without hold-open devices); mounted between 48 and 60 inches high; and located so that a clear floor space of at least 18 inches by 18 inches, centered on the tactile characters, is provided beyond the arc of any door's swing between the closed and 45 degrees open positions. If not all toilet rooms are accessible, provide signage with the International Symbol of Accessibility at all accessible toilet rooms. Standards §§ 216.8, 703.

(2) The door lacks maneuvering clearance on the pull side of the door. On the pull side of the door, provide maneuvering clearance at least 60 inches deep perpendicular to the doorway and at least 18 inches wide parallel to the doorway on the latch side. §§ 206.5, 404.2.4.1.

(3) The paper towel dispenser controls are mounted 54 inches above the finished floor. Operable parts and controls of this element shall be between 15 and 48 inches high and accompanied by clear floor space of 30 by 48 inches that allows a forward or parallel approach by a person using a wheelchair. Standards §§ 205.1, 305, 308.2, 308.3, 309.

(4) The lavatory apron is mounted 28 inches above the finished floor, and the hot water drain and pipes are not covered or configured to protect against contact. Provide at least 5% of all lavatories and sinks with the top of the rim or counter 34 inches high or less; knee clearance at least 30 inches wide, between 9 inches and 27 inches

high, extending between 11 and 25 inches deep at 9 inches high, and extending at least 8 inches deep at 27 inches high; and toe clearance at least 30 inches wide and 9 inches high, and extending between 17 and 25 inches deep under the lavatory; and the water supply and drain pipes insulated or otherwise configured to protect against contact; no sharp or abrasive surfaces underneath; clear floor space at least 30 inches wide by 48 inches deep positioned for a forward approach. Standards §§ 213.3.4, 305, 306, 606.

(5) No accessible toilet compartment is provided. Provide an accessible toilet compartment at least 60 inches wide and at least 59 inches deep (or at least 56 inches deep with a wall-mounted toilet) such that all of the compartment's elements, including door, door hardware, toilet, size and arrangement, toe clearances, grab bars, controls, and dispensers, comply with the Standards. Standards §§ 213.3.1, 301.1, 404, 604, 604.8.1, 609.

(6) The shower compartment is a non-compliant dimension. Provide a shower compartment that is 36 inches by 36 inches, with the clearance adjacent to the opening shall be 36 inches wide by 48 inches long measured from the control wall (so that the clearance extends beyond the seat). Standards §§ 213.3.6, 608, 609, 610.

vi. Women's Toilet Room and Shower

(1) No accessible toilet room sign is provided. Provide a toilet or locker room sign with raised and Braille characters. Tactile signs shall be mounted on the wall adjacent to the latch side of the door or the nearest adjacent wall (except that signs can be mounted on the push side of doors with closers and without hold-open devices); mounted between 48 and 60 inches high; and located so that a clear floor space of at least 18 inches by 18 inches, centered on the tactile characters, is provided beyond the arc of any door's swing between the closed and 45 degrees open positions. If not all toilet rooms are accessible, provide signage with the International Symbol of Accessibility at all accessible toilet rooms. Standards §§ 216.8, 703.

(2) The door lacks maneuvering clearance on the pull side of the door. On the pull side of the door, provide maneuvering clearance at least 60 inches deep perpendicular to the doorway and at least 18 inches wide parallel to the doorway on the latch side. §§ 206.5, 404.2.4.1.

(3) The paper towel dispenser controls are mounted 54 inches above the finished floor. Operable parts and controls of this element shall

be between 15 and 48 inches high and accompanied by clear floor space of 30 by 48 inches that allows a forward or parallel approach by a person using a wheelchair. Standards §§ 205.1, 305, 308.2, 308.3, 309.

(4) The lavatory apron is mounted 28 inches above the finished floor, and the hot water drain and pipes are not covered or configured to protect against contact. Provide at least 5% of all lavatories and sinks with the top of the rim or counter 34 inches high or less; knee clearance at least 30 inches wide, between 9 inches and 27 inches high, extending between 11 and 25 inches deep at 9 inches high, and extending at least 8 inches deep at 27 inches high; and toe clearance at least 30 inches wide and 9 inches high, and extending between 17 and 25 inches deep under the lavatory; and the water supply and drain pipes insulated or otherwise configured to protect against contact; no sharp or abrasive surfaces underneath; clear floor space at least 30 inches wide by 48 inches deep positioned for a forward approach. Standards §§ 213.3.4, 305, 306, 606.

(5) No accessible toilet compartment is provided. Provide an accessible toilet compartment at least 60 inches wide and at least 59 inches deep (or at least 56 inches deep with a wall-mounted toilet) such that all of the compartment's elements, including door, door hardware, toilet, size and arrangement, toe clearances, grab bars, controls, and dispensers, comply with the Standards. Standards §§ 213.3.1, 301.1, 404, 604, 604.8.1, 609.

(6) The shower compartment is a non-compliant dimension. Provide a shower compartment that is 36 inches by 36 inches, with the clearance adjacent to the opening shall be 36 inches wide by 48 inches long measured from the control wall (so that the clearance extends beyond the seat). Standards §§ 213.3.6, 608, 609, 610.

7. Within 30 months of entry of this Consent Decree, the County will complete the following modifications to the **Public Defender's Office**, located at 1001 Fourth Street in Eureka.

a. Parking

i. Two separate parking lots combined provide a total of 26 parking spaces, including one space, designated as reserved for people with disabilities, which is sloped and has no access aisle. On the shortest accessible route to the accessible entrance(s), provide one standard accessible parking space and one van accessible parking space designated as reserved for people with disabilities. Standard accessible spaces shall be a at least 96 inches wide and served by access aisles at least 60 inches wide. Van

accessible spaces shall be at least 132 inches wide and served by access aisles at least 60 inches wide, or at least 96 inches wide and served by access aisles at least 96 inches wide. Access aisles shall extend the full length of the parking spaces they serve and shall be marked so as to discourage parking in them. At sites with 5 or more parking spaces, provide vertical signs with the International Symbol of Accessibility at all spaces designated as reserved for persons with disabilities, mounted at least 60 inches high to the bottom of the sign. At van accessible spaces, provide an additional "van accessible" sign mounted at least 60 inches high to the bottom of the sign. All spaces and access aisles for persons with disabilities shall contain no changes in level, with slopes and cross-slopes not exceeding 2.08%, and their surfaces shall be firm, stable, and slip-resistant. If the parking facility does not serve a particular building or facility, provide accessible parking on the shortest accessible route to an accessible pedestrian entrance of the parking facility. If the parking facility serves a building with multiple accessible entrances or multiple buildings or facilities, provide dispersed parking spaces located on an accessible route closest to the accessible entrances. If the parking facility is a parking garage or otherwise has limitations on vertical clearances, provide minimum vertical clearance of 98 inches at the van accessible parking spaces and along at least one vehicle access route to such spaces from site entrances and exits. Standards §§ 208, 302, 502, 703.7.2.1.

b. Accessible route

i. The route to into the office is 30 inches because of an obstruction at the door. Provide to each area, feature, or element described an accessible route with a minimum clear width of 36 inches, except that the width may decrease to 32 inches for a depth of no more than 24 inches. Standards §§ 206, 403.5.1.

c. Single User Toilet Rooms

i. Women's

(1) The toilet room sign is not mounted on the wall adjacent to the latch side of the door and there are no Braille and raised characters provided. Provide a toilet room sign with raised and Braille characters. Tactile signs shall be mounted on the wall adjacent to the latch side of the door or the nearest adjacent wall (except that signs can be mounted on the push side of doors with closers and without hold-open devices); mounted between 48 and 60 inches high; and located so that a clear floor space of at least 18 inches by 18 inches, centered on the tactile characters, is provided beyond the arc of any door's swing between the closed and 45 degrees open positions. If not all toilet rooms are accessible, provide

signage with the International Symbol of Accessibility at all accessible toilet rooms. Standards §§ 216.8, 703.

(2) The clear floor space on the pull side of the door into the toilet room is obstructed with equipment. On the pull side of the door, provide maneuvering clearance at least 60 inches deep perpendicular to the doorway and at least 18 inches wide parallel to the doorway on the latch side. Standards §§ 206.5, 404.2.4.2, 404.3.2.

(3) No accessible coat hook is provided. Provide a coat hook between 15 and 48 inches high accompanied by clear floor space of 30 by 48 inches. Standards §§ 213.3.7, 305, 308, 603.4.

(4) The toilet seat cover dispenser controls are mounted at 59.5 inches above the finished floor. Operable parts and controls of this element shall be between 15 and 48 inches high and accompanied by clear floor space of 30 by 48 inches that allows a forward or parallel approach by a person using a wheelchair. Standards §§ 205.1, 305, 308.2, 308.3, 309.

(5) The toilet paper dispenser is mounted less than 12 inches over the side grab bar. Provide grab bars that have at least 1½ inches between the grab bar and any object projecting beside or below it and at least 12 inches between the grab bar and any object projecting above it. Standards §§ 213.3.2, 604.5, 609.3.

ii. Men's

(1) The toilet room sign is not mounted on the wall adjacent to the latch side of the door and there are no Braille and raised characters provided. Provide a toilet room sign with raised and Braille characters. Tactile signs shall be mounted on the wall adjacent to the latch side of the door or the nearest adjacent wall (except that signs can be mounted on the push side of doors with closers and without hold-open devices); mounted between 48 and 60 inches high; and located so that a clear floor space of at least 18 inches by 18 inches, centered on the tactile characters, is provided beyond the arc of any door's swing between the closed and 45 degrees open positions. If not all toilet rooms are accessible, provide signage with the International Symbol of Accessibility at all accessible toilet rooms. Standards §§ 216.8, 703.

(2) No accessible coat hook is provided. Provide a coat hook or towel hook between 15 and 48 inches high accompanied by clear floor space of 30 by 48 inches. Standards §§ 213.3.7, 305, 308, 603.4.

(3) The toilet seat cover dispenser controls are mounted at 56 inches above the finished floor. Operable parts and controls of this element shall be between 15 and 48 inches high and accompanied by clear floor space of 30 by 48 inches that allows a forward or parallel approach by a person using a wheelchair. Standards §§ 205.1, 305, 308.2, 308.3, 309.

(4) The toilet flush control is on the closed side. Provide a flush control mounted on the "open" side of the toilet's clear floor space, between 15 and 48 inches high, and requiring a maximum of 5 pounds of force to operate; or provide an automatic flush device. Standards §§ 213.3.2, 309.4, 604.6.

(5) The toilet paper dispenser is mounted less than 12 inches over the side grab bar. Provide grab bars that have at least 1½ inches between the grab bar and any object projecting beside or below it and at least 12 inches between the grab bar and any object projecting above it. Standards §§ 213.3.2, 604.5, 609.3.

d. Child Abuse Service Team (C.A.S.T)

i. The interior entrance door into the office has thumb latch hardware. Provide a door with hardware, mounted between 34 and 48 inches high, that is operable with one hand and does not require tight grasping, pinching, or twisting of the wrist and requires no more than 5 pounds of force to operate. Lever-operated mechanisms, push-type mechanisms, and U-shaped handles are acceptable designs. Standards §§ 206.4, 206.5, 309.4, 404.2.7.

ii. Single-user Toilet Room. The toilet room contains a number of inaccessible elements and is not accessible to people with disabilities. Provide an accessible toilet room such that all of the room's elements, including signage, door, door hardware, clear floor space, toilet, stall size and arrangement (if any), urinal (if provided), grab bars, lavatory, mirror, controls, and dispensers, comply with the Standards. Standards §§ 204, 205, 206, 213, 216, 225, 301.1, 401.1, 601.1, 703, 811.

8. Within 21 months of entry of this Consent Decree, the County will complete the following modifications to the **Social Services Building, Building B**, located at 537 W. Washington Street in Eureka.

a. Parking - None of the designated accessible parking spaces has an access aisle, and no designated accessible van parking space is provided. On the shortest accessible route to the accessible entrance(s), provide two standard accessible and one van accessible parking spaces designated as reserved for people with

disabilities. Standard accessible spaces shall be a at least 96 inches wide and served by access aisles at least 60 inches wide. Van accessible spaces shall be at least 132 inches wide and served by access aisles at least 60 inches wide or at least 96 inches wide and served by access aisles at least 96 inches wide. Access aisles shall extend the full length of the parking spaces they serve and shall be marked so as to discourage parking in them. At sites with 5 or more parking spaces, provide vertical signs with the International Symbol of Accessibility at all spaces designated as reserved for persons with disabilities, mounted at least 60 inches high to the bottom of the sign. At van accessible spaces, provide an additional "van accessible" sign mounted at least 60 inches high to the bottom of the sign. Standards §§ 208, 302, 502, 703.7.2.1.

b. Ramp

i. The ramp lacks a level landing at the top, the handrails do not continue to the top of the ramp, and the handrail surface is not smooth and free of sharp edges or splinters. Provide landings at the top and bottom of each ramp run such that the landings have slopes of no more than 2.08% in any direction and contain no changes in level; the landings are at least as wide as the ramp and 60 inches long at the top and bottom of every ramp run; and any landings provided where the ramp changes direction are at least 60 inches by 60 inches. If the ramp is subject to wet conditions, landings shall be designed to prevent the accumulation of water. On both sides of the ramp, provide handrails that have a diameter between 1¼ and 2 inches or a perimeter between 4 inches and 6¼ inches and a cross section of no more than 2¼ inches such that the handrails are continuous along the full length of the ramp run. Extensions shall return to the wall, guard, or landing surface (or continue on as handrails); handrails shall not rotate within their fittings; handrails shall be mounted at a consistent height between 34 inches and 38 inches above the ramp surface and at least 1½ inches from the wall; gripping surfaces and adjacent surfaces shall be free of sharp or abrasive elements and have rounded edges; and gripping surfaces shall not be obstructed along their tops or sides and the bottoms shall not be obstructed for more than 20% of their length and have no horizontal projections occurring closer than 1½ inches from the bottom of the gripping surface (except that the distance between horizontal projections and the bottom of the gripping surface can be reduced by ⅛ inch for each ½ inch of handrail perimeter over 4 inches). Standards §§ 206.2, 405.7, 405.8, 505.

c. Counter

i. The reception counter top is mounted 45 inches above the finished floor. Operable parts and controls of this element shall be between 15 and 48 inches high and accompanied by clear floor space of 30 by 48 inches that allows a forward or parallel approach by a person using a wheelchair.

Standards §§ 205.1, 305, 308.2, 308.3, 309.

9. Within 21 months of entry of this Consent Decree, the County will complete the following modifications to the **Social Services, Building A**, located at 929 Koster Street in Eureka.

a. Parking

i. Only three designated accessible parking spaces are provided. On the shortest accessible route to the accessible entrance, provide one van accessible space and three standard spaces designated as reserved for people with disabilities. Standard accessible spaces shall be a at least 96 inches wide and served by access aisles at least 60 inches wide. Van accessible spaces shall be at least 132 inches wide and served by access aisles at least 60 inches wide, or at least 96 inches wide and served by access aisles at least 96 inches wide. Access aisles shall extend the full length of the parking spaces they serve and shall be marked so as to discourage parking in them. At sites with 5 or more parking spaces, provide vertical signs with the International Symbol of Accessibility at all spaces designated as reserved for persons with disabilities, mounted at least 60 inches high to the bottom of the sign. At van accessible spaces, provide an additional "van accessible" sign mounted at least 60 inches high to the bottom of the sign. All spaces and access aisles for persons with disabilities shall contain no changes in level, with slopes and cross-slopes not exceeding 2.08%, and their surfaces shall be firm, stable, and slip-resistant. If the parking facility does not serve a particular building or facility, provide accessible parking on the shortest accessible route to an accessible pedestrian entrance of the parking facility. If the parking facility serves a building with multiple accessible entrances or multiple buildings or facilities, provide dispersed parking spaces located on an accessible route closest to the accessible entrances. If the parking facility is a parking garage or otherwise has limitations on vertical clearances, provide minimum vertical clearance of 98 inches at the van accessible parking spaces and along at least one vehicle access route to such spaces from site entrances and exits. Standards §§ 208, 302, 502, 703.7.2.1.

ii. The access aisle at the parking reserved for persons with disabilities contains a built up curb ramp and is not level. At each accessible parking space, provide an access aisle that is at least 60 inches wide, except at van accessible parking spaces that are less than 132 inches wide, in which case provide an access aisle at least 96 inches wide. All access aisles shall adjoin an accessible route; extend the full length of the parking space they serve; be marked so as to discourage parking in them; contain no changes in level, with slopes and cross-slopes not exceeding 2.08%; and have surfaces that are firm, stable, and slip-resistant. Standards §§ 208, 302, 502.

iii. The parking reserved for persons with disabilities lacks required signage. At sites with 5 or more parking spaces, provide vertical signs with the International Symbol of Accessibility at all spaces designated as reserved for persons with disabilities, and, at van accessible parking spaces, provide an additional "van accessible" sign. Mount signs at least 60 inches high to the bottom of the sign. Standards §§ 208, 216.5, 502.6, 703.7.2.1.

b. Ramp. No level landing is provided at the bottom of the ramp, and the landing is 53 inches wide. Provide landings at the top and bottom of each ramp run such that the landings have slopes of no more than 2.08% in any direction and contain no changes in level; the landings are at least as wide as the ramp and 60 inches long at the top and bottom of every ramp run. If the ramp is subject to wet conditions, landings shall be designed to prevent the accumulation of water. Standards §§ 206.2, 405.7.

c. Drinking Fountain. This area is inaccessible because the drinking fountain protrudes into the walkway and is not detectable to blind persons using a cane. Unless protected by a cane detectable barrier, objects with their leading edges between 27 inches and 80 inches high shall not protrude into circulation paths more than 4 inches for wall-mounted elements, or 12 inches for free standing post- or pylon-mounted elements. Protruding objects (and cane-detectable barriers) shall not reduce the clear width of accessible routes or maneuvering spaces below minimum requirements. Standards §§ 206, 307.

d. Telephone. The telephone protrudes into the walkway and is not detectable to a blind person using a cane. Unless protected by a cane detectable barrier, objects with their leading edges between 27 inches and 80 inches high shall not protrude into circulation paths more than 4 inches for wall-mounted elements, or 12 inches for free standing post- or pylon-mounted elements. Protruding objects (and cane-detectable barriers) shall not reduce the clear width of accessible routes or maneuvering spaces below minimum requirements. Standards §§ 206, 307.

e. Offices and Counters

i. The number ticket machine at the counter is mounted at 57 inches above the finished floor. Operable parts and controls of this element shall be between 15 and 48 inches high and accompanied by clear floor space of 30 by 48 inches that allows a forward or parallel approach by a person using a wheelchair. Standards §§ 205.1, 305, 308.2, 308.3, 309.

ii. Interview rooms. The tables have 26 inches of knee clearance. At least 5% (but no fewer than 1) of dining or work surfaces shall be available for use by people with mobility disabilities. Each accessible dining or work surface shall be on an accessible route; with clear floor space 30 inches wide by 48 inches deep positioned for a forward approach; with knee

clearance at least 11 inches deep at 9 inches high and at least 8 inches deep at 27 inches high; and with a dining or work surface between 28 inches and 34 inches high. They shall be distributed throughout the facility, if applicable. Standards §§ 226, 305, 306, 902.

iii. Fingerprinting. The clear opening width of the door to the finger printing room is 29 inches. Provide a door with a clear opening at least 32 inches wide, measured between the face of the door and the opposite stop, when the door is open 90 degrees. Standards §§ 206.4, 206.5, 404.2.3.

f. Toilet Room

i. Women's

(1) The door into the toilet room has one inch of clear floor space on the pull side of the door. On the pull side of the door, provide maneuvering clearance at least 60 inches deep perpendicular to the doorway and at least 18 inches wide parallel to the doorway on the latch side. Standards §§ 206.5, 404.2.4.1.

(2) The distance between the entrance doors in series into the toilet room is 15 inches. The minimum space between two hinged or pivoted doors shall be at least 48 inches plus the width of any door(s) swinging into the space. Standards §§ 206.5, 404.2.6.

(3) The space between the rear grab bar and the wall is three inches. Provide grab bars such that there is 1½ inches between the grab bar and the wall on which it is mounted. Standards §§ 213.3.2, 609.3.

ii. Men's

(1) The door into the toilet room has one inch of clear floor space on the pull side. On the pull side of the door, provide maneuvering clearance at least 60 inches deep perpendicular to the doorway and at least 18 inches wide parallel to the doorway on the latch side. Standards §§ 206.5, 404.2.4.1.

(2) The distance between the entrance doors in series into the toilet room is 15 inches. The minimum space between two hinged or pivoted doors shall be at least 48 inches plus the width of any door(s) swinging into the space. Standards §§ 206.5, 404.2.6.

(3) The top of the toilet seat is 16 inches above the finished floor. Provide a toilet with the top of the seat 17 to 19 inches high. The seat shall not be sprung to return to a lifted position. Standards §§ 213.3.2, 604.4.

(4) The toilet flush control is on the closed side. Provide a flush control mounted on the "open" side of the toilet's clear floor space, between 15 and 48 inches high, and requiring a maximum of 5 pounds of force to operate; or provide an automatic flush device. Standards §§ 213.3.2, 309.4, 604.6.

10. Within 21 months of entry of this Consent Decree, the County will complete the following modifications to the **Social Services, Building D & G**, located at 638 W. Clark in Eureka.

a. Parking. The access aisle at the van accessible parking space is 76 inches wide. Provide van accessible parking spaces that are a minimum of 132 inches wide and served by access aisles at least 60 inches wide, or are a minimum of 96 inches wide and served by access aisles at least 96 inches wide. Standards §§ 208, 502.2, 502.3.1.

b. Ramp. No level landing is provided at the bottom of the ramp and the handrails do not extend 12 inches at the top and bottom of the ramp. Provide landings at the top and bottom of each ramp run such that each have slopes of no more than 2.08% in any direction and contain no changes in level; the landings are at least as wide as the ramp and 60 inches long at the top and bottom of every ramp run; and any landings provided where the ramp changes direction are at least 60 inches by 60 inches. If the ramp is subject to wet conditions, landings shall be designed to prevent the accumulation of water. On both sides of the ramp, handrails shall have a continuous gripping surface extending at least 12 inches beyond the top and bottom of the ramp parallel with the ground surface (except in alterations where extensions would be hazardous due to plan configuration); extensions shall return to the wall, guard, or landing surface (or continue on as handrails); Standards §§ 206.2, 407.7, 405.8, 505.

c. Drinking Fountain. No drinking fountain is provided for people who have difficulty bending or stooping. Provide 50% of all drinking fountains on each floor or exterior site with a spout outlet between 38 and 43 inches high and 50% of all drinking fountains on each floor or exterior site with a spout outlet no more than 36 inches high that otherwise complies with the Standards. At least one of each type shall be provided. Standards §§ 211, 602.4, 602.7.

d. Office and Counters

i. Bldg D. The reception window counter is mounted at 42 inches above the finished floor. Provide counters dispersed throughout the facility (dispersion is not required where only 1 counter is provided) on accessible routes such that each counter has a portion extending the same depth as the counter top and no more than 36 inches high. If a parallel approach is provided, the accessible portion of the counter shall be at least 36 inches

long (unless the entire counter is less than 36 inches high) and have clear floor space positioned for a parallel approach; if a forward approach is provided, the accessible portion of the counter shall be at least 30 inches long and have knee and toe space provided under the counter and clear floor space positioned for a forward approach. Standards §§ 227.3, 305, 306, 904.4.

ii. Building G meeting room. The door has knob hardware. Provide a door with hardware, mounted between 34 and 48 inches high, that is operable with one hand and does not require tight grasping, pinching, or twisting of the wrist and requires no more than 5 pounds of force to operate. Lever-operated mechanisms, push-type mechanisms, and U-shaped handles are acceptable designs. Standards §§ 206.4, 206.5, 309.4, 404.2.7.

e. Toilet Rooms - 2 Unisex; Bldg D

i. The toilet room sign is not mounted on the wall adjacent to the latch side of the door. Provide a toilet room sign with raised and Braille characters. Tactile signs shall be mounted on the wall adjacent to the latch side of the door or the nearest adjacent wall (except that signs can be mounted on the push side of doors with closers and without hold-open devices); mounted 48 inches minimum from floor to the baseline of the lowest tactile character and 60 inches maximum from the floor to the baseline of the highest tactile character; and located so that a clear floor space of at least 18 inches by 18 inches, centered on the tactile characters, is provided beyond the arc of any door's swing between the closed and 45 degrees open positions. If not all toilet rooms are accessible, provide signage with the International Symbol of Accessibility at all accessible toilet rooms. Standards §§ 216.2, 703.

ii. No accessible coat hook is provided. Provide a coat hook between 15 and 48 inches high accompanied by clear floor space of 30 by 48 inches. Standards §§ 213.3.7, 305, 308, 603.4.

iii. The toilet seat cover dispenser controls are mounted at 57 inches above the finished floor over the toilet. Operable parts and controls of this element shall be no more than 48 inches high for a forward reach, or no more than 44 inches high if over an obstruction between 20 and 25 inches deep (for a forward reach, obstructions may not be deeper than 25 inches and obstructions must allow knee space); or mounted not more than 48 inches high for a side reach, or no more than 46 inches high if over an obstruction between 10 and 24 inches deep (for a side reach, obstruction may not be deeper than 24 inches); and accompanied by clear floor space of 30 inches by 48 inches that allows a forward or parallel approach, respectively, by a person using a wheelchair. Standards §§ 205.1, 305, 308.2, 308.3.

f. Toilet Rooms - 2 Unisex; Bldg G

i. The toilet room sign is mounted 66 inches above the finished floor. Provide a toilet or locker room sign with raised and Braille characters. Tactile signs shall be mounted on the wall adjacent to the latch side of the door or the nearest adjacent wall (except that signs can be mounted on the push side of doors with closers and without hold-open devices); mounted between 48 and 60 inches high; and located so that a clear floor space of at least 18 inches by 18 inches, centered on the tactile characters, is provided beyond the arc of any door's swing between the closed and 45 degrees open positions. If not all toilet rooms are accessible, provide signage with the International Symbol of Accessibility at all accessible toilet rooms. Standards §§ 216.8, 703.

ii. The door into the toilet room has 10 inches of clear floor space on the latch side in the pull direction. On the pull side of the door provide maneuvering clearance at least 60 inches deep perpendicular to the doorway and at least 18 inches wide parallel to the doorway on the latch side. Standards §§ 206.5, 404.2.4.1.

iii. No accessible coat hook is provided. Provide a coat hook between 15 and 48 inches high accompanied by clear floor space of 30 by 48 inches. Standards §§ 213.3.7, 305, 308, 603.4.

iv. The lavatory hot water and drain pipes are not insulated or otherwise configured to protect against contact. Provide water supply and drain pipes insulated or otherwise configured to protect against contact. There shall be no sharp or abrasive surfaces underneath the lavatory or sink. Standards §§ 213.3.4, 606.5.

v. The toilet seat cover dispenser controls are mounted at 60 inches above the finished floor over the toilet. Operable parts and controls of this element shall be no more than 48 inches high for a forward reach, or no more than 44 inches high if over an obstruction between 20 and 25 inches deep (for a forward reach, obstructions may not be deeper than 25 inches and obstructions must allow knee space); or mounted not more than 48 inches high for a side reach, or no more than 46 inches high if over an obstruction between 10 and 24 inches deep (for a side reach, obstruction may not be deeper than 24 inches); and accompanied by clear floor space of 30 inches by 48 inches that allows a forward or parallel approach, respectively, by a person using a wheelchair. Standards §§ 205.1, 305, 308.2, 308.3.

vi. The paper towel dispenser controls are mounted at 53 inches above the finished floor with a forward reach required. Operable parts and controls of this element shall be between 15 and 48 inches high and accompanied by clear floor space of 30 by 48 inches that allows a forward or parallel

approach by a person using a wheelchair. Standards §§ 205.1, 305, 308.2, 308.3, 309.

vii. The sanitary napkin dispenser controls are mounted at 55 inches above the finished floor. Operable parts and controls of this element shall be between 15 and 48 inches high and accompanied by clear floor space of 30 by 48 inches that allows a forward or parallel approach by a person using a wheelchair. Standards §§ 205.1, 305, 308.2, 308.3, 309.

viii. The toilet flush control is on the closed side. Provide a flush control mounted on the "open" side of the toilet's clear floor space, between 15 and 48 inches high, and requiring a maximum of 5 pounds of force to operate; or provide an automatic flush device. Standards §§ 213.3.2, 309.4, 604.6.

11. Within 33 months entry of this Consent Decree, the County will complete the following modifications to the **Juvenile Probation Office**, located at 2002 Harrison Avenue in Eureka.

a. Accessible Route

i. The route from the parking lot to the entrance of the building has a slope of 10.9%. To each area, feature, or element described, provide at least one accessible route that coincides with or is located in the same area as general circulation paths. The accessible route must have no level changes greater than ¼ inch vertically unless they are beveled with a slope no greater than 50%; and have a running slope no greater than 5% (or have been constructed as a fully accessible ramp) and a cross slope no greater than 2.08%. Standards §§ 206, 301.1, 401.1.

ii. Stairs

(1) The inside handrail is not continuous and 12 inch extensions are not provided at the top or bottom of the stairs. Provide stairs with closed risers, uniform tread width and riser height, a tread depth of at least 11 inches, a riser height between 4 inches and 7 inches, and nosings, treads, and risers that otherwise comply fully with the Standards. Provide handrails on both sides of the stairs such that the inside handrail on switchbacks or doglegs is continuous. Handrails shall extend at least 12 inches beyond the top riser and at least the depth of one tread beyond the bottom riser; there shall be a clear space of at least 1½ inches between the handrails and the wall; handrail gripping surfaces shall be continuous and shall not be obstructed along their tops or sides; handrails shall have a diameter between 1¼ and 2 inches or a perimeter between 4 inches and 6¼ inches and a cross section of no more than 2¼ inches;

handrails shall be mounted between 34 and 38 inches above stair nosings; the ends of the handrails shall be returned to a wall, a guard, or the landing surface; and the handrails shall not rotate within their fittings and shall be free of sharp or abrasive elements. Standards §§ 206, 210, 504, 505.

b. Drinking Fountain

i. First level. The drinking fountain spout is located 41 inches above the finished floor, no knee space clearance is provided, and no drinking fountain is provided for people who have trouble bending or stooping. 50% of all drinking fountains on each floor shall have a spout outlet no more than 36 inches high and located at least 15 inches from the wall of the vertical support and no more than 5 inches from the front edge, which provides a flow of water at least 4 inches high no more than 5 inches from the front of the unit. Fountain controls shall be operable with one hand; shall require no more than 5 pounds of force to operate; and shall not require tight grasping, pinching, or twisting of the wrist to operate. Clear floor space shall be at least 30 inches by 48 inches (36 inches by 48 inches if the unit is in an alcove more than 24 inches deep) positioned for a forward approach and centered on the unit; and knee clearance shall be at least 11 inches deep at 9 inches high and at least 8 inches deep at 27 inches high. Additionally, 50% of all drinking fountains on each floor shall have a spout outlet between 38 and 43 inches high (where there is an uneven number of drinking fountains, the last fountain can comply with either of the requirements herein, except that at least 1 fountain must comply with each, and all fountains must comply with one or the other). Standards §§ 211, 602.

ii. Basement level. The drinking fountain spout is 41 inches above the finished floor, no knee space clearance is provided, and no drinking fountain is provided to those who have trouble bending or stooping. 50% of all drinking fountains on each floor shall have a spout outlet no more than 36 inches high and located at least 15 inches from the wall of the vertical support and no more than 5 inches from the front edge, which provides a flow of water at least 4 inches high no more than 5 inches from the front of the unit. Fountain controls shall be operable with one hand; shall require no more than 5 pounds of force to operate; and shall not require tight grasping, pinching, or twisting of the wrist to operate. Clear floor space shall be at least 30 inches by 48 inches (36 inches by 48 inches if the unit is in an alcove more than 24 inches deep) positioned for a forward approach and centered on the unit; and knee clearance shall be at least 11 inches deep at 9 inches high and at least 8 inches deep at 27 inches high. Additionally, 50% of all drinking fountains on each floor shall have a spout outlet between 38 and 43 inches high (where there is an uneven number of drinking fountains, the last fountain can comply with

either of the requirements herein, except that at least 1 fountain must comply with each, and all fountains must comply with one or the other). Standards §§ 211, 602.

c. Single User Toilet Room - First Level

i. The pressure required to open the door is 15 pounds. Provide a door that requires no more than 5 pounds of force to open (not including the initial force needed to overcome inertia, retracting bolts, etc.). Standards §§ 206.5, 404.2.9.

ii. No accessible mirror is provided. Provide at least one mirror such that, if it is mounted above a lavatory or countertop, it is mounted with the bottom edge of the reflecting surface no more than 40 inches high; or, if it is not mounted above a lavatory or countertop, it is mounted with the bottom edge of the reflecting surface no more than 35 inches high. Standards §§ 213.2, 603.3.

iii. The toilet flush control is on the closed side. Provide a flush control mounted on the "open" side of the toilet's clear floor space, between 15 and 48 inches high, and requiring a maximum of 5 pounds of force to operate; or provide an automatic flush device. Standards §§ 213.3.2, 309.4, 604.6.

d. Office and Counters

(1) The top of the reception counter on the first level is 42 inches above the finished floor. Provide counters dispersed throughout the facility (dispersion is not required where only 1 counter is provided) on accessible routes such that each counter has a portion extending the same depth as the counter top and no more than 36 inches high. If a parallel approach is provided, the accessible portion of the counter shall be at least 36 inches long (unless the entire counter is less than 36 inches high) and have clear floor space positioned for a parallel approach; if a forward approach is provided, the accessible portion of the counter shall be at least 30 inches long and have knee and toe space provided under the counter and clear floor space positioned for a forward approach. Standards §§ 227.3, 305, 306, 904.4.

(2) The door to the ground floor conference room has knob hardware. Provide a door with hardware, mounted between 34 and 48 inches high, that is operable with one hand and does not require tight grasping, pinching, or twisting of the wrist and requires no more than 5 pounds of force to operate. Lever-operated mechanisms, push-type mechanisms, and U-shaped handles are acceptable

designs. Standards §§ 206.4, 206.5, 309.4, 404.2.7.

(3) The top of the reception counter at the basement level is mounted 41 inches above the finished floor. Provide counters dispersed throughout the facility (dispersion is not required where only 1 counter is provided) on accessible routes such that each counter has a portion extending the same depth as the counter top and no more than 36 inches high. If a parallel approach is provided, the accessible portion of the counter shall be at least 36 inches long (unless the entire counter is less than 36 inches high) and have clear floor space positioned for a parallel approach; if a forward approach is provided, the accessible portion of the counter shall be at least 30 inches long and have knee and toe space provided under the counter and clear floor space positioned for a forward approach. Standards §§ 227.3, 305, 306, 904.4.

(4) The top of the copy/fingerprinting counter in the basement is mounted 43 inches above the finished floor. Provide counters dispersed throughout the facility (dispersion is not required where only 1 counter is provided) on accessible routes such that each counter has a portion extending the same depth as the counter top and no more than 36 inches high. If a parallel approach is provided, the accessible portion of the counter shall be at least 36 inches long (unless the entire counter is less than 36 inches high) and have clear floor space positioned for a parallel approach; if a forward approach is provided, the accessible portion of the counter shall be at least 30 inches long and have knee and toe space provided under the counter and clear floor space positioned for a forward approach. Standards §§ 227.3, 305, 306, 904.4.

e. Toilet Room Basement

i. Women's

(1) No toilet room sign is provided. Provide a toilet room sign with raised and Braille characters. Tactile signs shall be mounted on the wall adjacent to the latch side of the door or the nearest adjacent wall (except that signs can be mounted on the push side of doors with closers and without hold-open devices); mounted between 48 and 60 inches high; and located so that a clear floor space of at least 18 inches by 18 inches, centered on the tactile characters, is provided beyond the arc of any door's swing between the closed and 45 degrees open positions. If not all toilet rooms are accessible, provide signage with the International Symbol of Accessibility at all accessible toilet rooms. Standards §§ 216.8, 703.

(2) The two doors leading into the toilet room each have an opening width of 27 inches. Provide a door with a clear opening at least 32 inches wide, measured between the face of the door and the opposite stop, when the door is open 90 degrees. Standards §§ 206.4, 206.5, 404.2.3.

(3) The first door leading into the toilet room requires 15 pounds to open the door and the second door requires 20 pounds to open. Provide a door that requires no more than 5 pounds of force to open (not including the initial force needed to overcome inertia, retracting bolts, etc.). Standards §§ 206.5, 404.2.9.

(4) The second door leading into the toilet room, which is accessed through a front approach, has 6 inches of clear floor space on the latch side, pull side of the door. On the pull side of the door, provide maneuvering clearance at least 60 inches deep perpendicular to the doorway and at least 18 inches (24 inches is preferred) of maneuvering clearance on the latch side of the door. Standards §§ 206.5, 404.2.4.1.

(5) The route to the toilet room is 27 inches wide. Provide to each area, feature, or element described an accessible route with a minimum clear width of 36 inches, except that the width may decrease to 32 inches for a depth of no more than 24 inches. Standards §§ 206, 403.5.1.

(6) No accessible mirror is provided. Provide at least one mirror such that, if it is mounted above a lavatory or countertop, it is mounted with the bottom edge of the reflecting surface no more than 40 inches high; or, if it is not mounted above a lavatory or countertop, it is mounted with the bottom edge of the reflecting surface no more than 35 inches high. Standards §§ 213.2, 603.3.

(7) The wall-mounted sanitary napkin dispenser protrudes into the main walkway and is not detectable to a blind person using a cane. Unless protected by a cane detectable barrier, objects with their leading edges between 27 inches and 80 inches high shall not protrude into circulation paths more than 4 inches for wall-mounted elements, or 12 inches for free standing post- or pylon-mounted elements. Protruding objects (and cane-detectable barriers) shall not reduce the clear width of accessible routes or maneuvering spaces below minimum requirements. Standards §§ 206, 307.

(8) The lavatory has less than 27 inches of vertical knee clearance, the

pipes are not covered or otherwise configured to protect against contact, and the faucet hardware requires tight grasping, pinching, or twisting of the wrist. Provide at least 5% of all lavatories and sinks with the top of the rim or counter 34 inches high or less; knee clearance at least 30 inches wide, between 9 inches and 27 inches high, extending between 11 and 25 inches deep at 9 inches high, and extending at least 8 inches deep at 27 inches high; and toe clearance at least 30 inches wide and 9 inches high, and extending between 17 and 25 inches deep under the lavatory; water supply and drain pipes insulated or otherwise configured to protect against contact; no sharp or abrasive surfaces underneath; clear floor space at least 30 inches wide by 48 inches deep positioned for a forward approach (except that a parallel approach with no knee and toe clearance can be provided at a kitchen sink where there is no cook top or conventional range and at wet bars); and a faucet that can be operated with no more than 5 pounds of force and can be used with one hand and without tight grasping, pinching, or twisting of the wrist (lever-operated, push-type, and electronically controlled mechanisms are examples of acceptable designs). Hand-operated metering faucets shall remain open for at least 10 seconds. Standards §§ 213.3.4, 305, 306, 309, 606.

(9) No accessible toilet compartment is provided. Provide an accessible toilet compartment at least 60 inches wide and at least 59 inches deep (or at least 56 inches deep with a wall-mounted toilet) such that all of the compartment's elements, including door, door hardware, toilet, size and arrangement, toe clearances, grab bars, controls, and dispensers, comply with the Standards. Standards §§ 213.3.1, 301.1, 404, 604, 604.8.1, 609.

ii. Men's

(1) No toilet room sign is provided. Provide a toilet or locker room sign with raised and Braille characters. Tactile signs shall be mounted on the wall adjacent to the latch side of the door or the nearest adjacent wall (except that signs can be mounted on the push side of doors with closers and without hold-open devices); mounted between 48 and 60 inches high; and located so that a clear floor space of at least 18 inches by 18 inches, centered on the tactile characters, is provided beyond the arc of any door's swing between the closed and 45 degrees open positions. If not all toilet rooms are accessible, provide signage with the International Symbol of Accessibility at all accessible toilet rooms. Standards §§ 216.8, 703.

(2) The door into the toilet room has an opening width of 27 inches.

Provide a door with a clear opening at least 32 inches wide, measured between the face of the door and the opposite stop, when the door is open 90 degrees. Standards §§ 206.4, 206.5, 404.2.3.

(3) The pressure required to open the door is 12 pounds. Provide a door that requires no more than 5 pounds of force to open (not including the initial force needed to overcome inertia, retracting bolts, etc.). Standards §§ 206.5, 404.2.9.

(4) The route to the toilet room is 29 inches wide. Provide to each area, feature, or element described an accessible route with a minimum clear width of 36 inches, except that the width may decrease to 32 inches for a depth of no more than 24 inches. Standards §§ 206, 403.5.1.

(5) No accessible mirror is provided. Provide at least one mirror such that, if it is mounted above a lavatory or countertop, it is mounted with the bottom edge of the reflecting surface no more than 40 inches high; or, if it is not mounted above a lavatory or countertop, it is mounted with the bottom edge of the reflecting surface no more than 35 inches high. Standards §§ 213.2, 603.3.

(6) Insufficient turning space is provided within the toilet room. Provide an unobstructed turning space at least 60 inches in diameter or a T-shaped space complying with § 304.3.2. Standards §§ 213.2, 304.3, 603.2.1.

(7) The lavatory has less than 27 inches of vertical knee clearance, the pipes are not covered or otherwise configured to protect against contact, and the faucet hardware requires tight grasping, pinching, or twisting of the wrist. Provide at least 5% of all lavatories and sinks with the top of the rim or counter 34 inches high or less; knee clearance at least 30 inches wide, between 9 inches and 27 inches high, extending between 11 and 25 inches deep at 9 inches high, and extending at least 8 inches deep at 27 inches high; and toe clearance at least 30 inches wide and 9 inches high, and extending between 17 and 25 inches deep under the lavatory; water supply and drain pipes insulated or otherwise configured to protect against contact; no sharp or abrasive surfaces underneath; clear floor space at least 30 inches wide by 48 inches deep positioned for a forward approach (except that a parallel approach with no knee and toe clearance can be provided at a kitchen sink where there is no cook top or conventional range and at wet bars); and a faucet that can be operated with no more than 5 pounds of force and can be used with one hand and without tight grasping, pinching, or twisting of the wrist (lever-operated, push-type, and electronically controlled

mechanisms are examples of acceptable designs). Hand-operated metering faucets shall remain open for at least 10 seconds. Standards §§ 213.3.4, 305, 306, 309, 606.

(8) The urinal is inaccessible because the rim is 25 inches above the finished floor and the controls are mounted 49 inches above the finished floor. Provide a stall-type or a wall-hung urinal with a rim mounted 17 inches high or less; a depth of at least 13½ inches from the outer face to the rear of the urinal; a clear floor space at least 30 inches wide and 48 inches deep positioned for a forward approach; and a flush control between 15 and 48 inches high or an automatic flush. Standards §§ 213.3.3, 305, 308.2, 309.4, 605.

(9) No accessible toilet compartment is provided. Provide an accessible toilet compartment at least 60 inches wide and at least 59 inches deep (or at least 56 inches deep with a wall-mounted toilet) such that all of the compartment's elements, including door, door hardware, toilet, size and arrangement, toe clearances, grab bars, controls, and dispensers, comply with the Standards. Standards §§ 213.3.1, 301.1, 404, 604, 604.8.1, 609.

12. Within 9 months of entry of this Consent Decree, the County will complete the following modifications to **Environmental Health - Public Health**, located at 100 H Street in Eureka.

a. Toilet Rooms

i. Men's

(1) The toilet room sign is not mounted on the wall adjacent to the latch side of the door with Braille and/or raised characters. Provide a toilet room sign with raised and Braille characters. Tactile signs shall be mounted on the wall adjacent to the latch side of the door or the nearest adjacent wall (except that signs can be mounted on the push side of doors with closers and without hold-open devices); mounted 48 inches minimum from floor to the baseline of the lowest tactile character and 60 inches maximum from the floor to the baseline of the highest tactile character; and located so that a clear floor space of at least 18 inches by 18 inches, centered on the tactile characters, is provided beyond the arc of any door's swing between the closed and 45 degrees open positions. If not all toilet rooms are accessible, provide signage with the International Symbol of Accessibility at all accessible toilet rooms. Standards §§ 216.2, 703.

(2) The pressure required to open the entry door is 15 pounds. Provide

a door that requires no more than 5 pounds of force to open (not including the initial force needed to overcome inertia, retracting bolts, etc.). Standards §§ 206.5, 404.2.9.

(3) No accessible coat hook is provided. Provide a coat hook or towel hook between 15 and 48 inches high accompanied by clear floor space of 30 by 48 inches. Standards §§ 213.3.7, 305, 308, 603.4.

(4) The toilet paper dispenser is mounted less than 12 inches above the side grab bar. Provide a toilet paper dispenser that is mounted with its centerline between 7 and 9 inches from the front of the toilet and with its outlet between 15 and 48 inches high with continuous paper flow that does not control delivery. The dispenser shall be mounted either at least 1½ inches below the side grab bar or at least 12 inches above the side grab bar. Standards §§ 213.3.2, 604.7, 609.3.

ii. Women's

(1) The toilet room sign is not mounted on the wall adjacent to the latch side of the door with Braille and/or raised characters. Provide a toilet room sign with raised and Braille characters. Tactile signs shall be mounted on the wall adjacent to the latch side of the door or the nearest adjacent wall (except that signs can be mounted on the push side of doors with closers and without hold-open devices); mounted 48 inches minimum from floor to the baseline of the lowest tactile character and 60 inches maximum from the floor to the baseline of the highest tactile character; and located so that a clear floor space of at least 18 inches by 18 inches, centered on the tactile characters, is provided beyond the arc of any door's swing between the closed and 45 degrees open positions. If not all toilet rooms are accessible, provide signage with the International Symbol of Accessibility at all accessible toilet rooms. Standards §§ 216.2, 703.

(2) The pressure required to open the entry door is 15 pounds. Provide a door that requires no more than 5 pounds of force to open (not including the initial force needed to overcome inertia, retracting bolts, etc.). Standards §§ 206.5, 404.2.9.

(3) No accessible coat hook is provided. Provide a coat hook or towel hook between 15 and 48 inches high accompanied by clear floor space of 30 by 48 inches. Standards §§ 213.3.7, 305, 308, 603.4.

(4) The toilet paper dispenser is mounted less than 12 inches above the side grab bar. Provide a toilet paper dispenser that is mounted with

its centerline between 7 and 9 inches from the front of the toilet and with its outlet between 15 and 48 inches high with continuous paper flow that does not control delivery. The dispenser shall be mounted either at least 1½ inches below the side grab bar or at least 12 inches above the side grab bar. Standards §§ 213.3.2, 604.7, 609.3.

(5) The toilet flush control is on the closed side. Provide a flush control mounted on the "open" side of the toilet's clear floor space, between 15 and 48 inches high, and requiring a maximum of 5 pounds of force to operate; or provide an automatic flush device. Standards §§ 213.3.2, 309.4, 604.6.

13. Within 15 months of entry of this Consent Decree, the County will complete the following modifications to **Conflict Counsel**, located at 931 3rd Street in Eureka.

a. Parking

i. The access aisle at the parking reserved for persons with disabilities is 64 inches wide. Provide designated accessible parking spaces that are a minimum of 96 inches wide and served by access aisles at least 60 inches wide. Provide van accessible parking spaces that are a minimum of 132 inches wide and served by access aisles at least 60 inches wide, or are a minimum of 96 inches wide and served by access aisles at least 96 inches wide. Standards §§ 208, 502.2, 502.3.1.

ii. The parking reserved for persons with disabilities lacks required signage. At sites with 5 or more parking spaces, provide vertical signs with the International Symbol of Accessibility at all spaces designated as reserved for persons with disabilities, and, at van accessible parking spaces, provide an additional "van accessible" sign. Mount signs at least 60 inches high to the bottom of the sign. Standards §§ 208, 216.5, 502.6, 703.7.2.1.

iii. The designated accessible parking spaces and access aisle are not level. Provide designated accessible parking spaces and access aisles that contain no changes in level, with slopes and cross-slopes not exceeding 2.08%, with surfaces that are firm, stable, and slip-resistant. Standards §§ 208, 302, 502.4.

b. Single User Toilet Room

i. The toilet room sign is not mounted on the wall adjacent to the latch side of the door and has no Braille and/or raised characters. Provide a toilet room sign with raised and Braille characters. Tactile signs shall be mounted on the wall adjacent to the latch side of the door or the nearest adjacent wall (except that signs can be mounted on the push side of doors

with closers and without hold-open devices); mounted between 48 and 60 inches high; and located so that a clear floor space of at least 18 inches by 18 inches, centered on the tactile characters, is provided beyond the arc of any door's swing between the closed and 45 degrees open positions. If not all toilet rooms are accessible, provide signage with the International Symbol of Accessibility at all accessible toilet rooms. Standards §§ 216.8, 703.

ii. The door to the toilet room provides insufficient clear floor space on the latch side in the pull direction. On the pull side of the door, provide maneuvering clearance at least 60 inches deep perpendicular to the doorway and at least 18 wide parallel to the doorway on the latch side. Standards §§ 206.5, 404.2.4.1.

iii. The door to the toilet room provides insufficient clear floor space on the latch side in the push direction. On the push side of the door, provide maneuvering clearance at least 48 inches deep perpendicular to the doorway and at least 12 inches of maneuvering clearance on the latch side of the door, or remove the closer or the latch. Standards §§ 206.5, 404.2.4.1.

iv. No accessible coat hook is provided. Provide a coat hook or towel hook between 15 and 48 inches high accompanied by clear floor space of 30 by 48 inches. Standards §§ 213.3.7, 305, 308, 603.4.

v. No accessible mirror is provided. Provide at least one mirror such that, if it is mounted above a lavatory or countertop, it is mounted with the bottom edge of the reflecting surface no more than 40 inches high; or, if it is not mounted above a lavatory or countertop, it is mounted with the bottom edge of the reflecting surface no more than 35 inches high. Standards §§ 213.2, 603.3.

vi. The clear floor space at the lavatory is obstructed. Provide a lavatory with clear floor space at least 30 inches wide by 48 inches deep positioned for a forward approach. Standards §§ 213.3.4, 305, 606.

vii. Turning space in the toilet room is obstructed by stored items. Provide an unobstructed turning space at least 60 inches in diameter or a T-shaped space complying with § 304.3.2. Standards §§ 213.2, 304.3, 603.2.1.

viii. The toilet lacks sufficient clear floor space. Provide clearance at the toilet that is at least 60 inches wide and 56 inches deep. This clearance may overlap with the toilet, grab bars, dispensers, sanitary napkin disposal, coat hooks, shelves, accessible routes, clear floor space and clearances for other fixtures, and turning space; but no other fixtures or obstructions, including lavatories, may be located within this clearance. Standards §§

213.3.2, 604.3.

ix. The closer end of the side grab bar at the toilet is 14 inches from the rear wall. Provide a side grab bar that is at least 42 inches in overall length, with the far end mounted at least 54 inches from the rear wall, and with the closer end no more than 12 inches from the rear wall. Standards §§ 213.3.2, 604.5.1.

x. The rear grab bar at the toilet is obstructed by a toilet seat cover dispenser. Provide grab bars that have at least 1½ inches between the grab bar and any object projecting beside or below it and at least 12 inches between the grab bar and any object projecting above it. Standards §§ 213.3.2, 604.5, 609.3.

14. Within 15 months of entry of this Consent Decree, the County will complete the following modifications to the **Victim Witness Program**, located at 712 Fourth Street in Eureka.

a. Offices

i. The entrance door into the reception area and the doors to the meeting room and the director's office have knob hardware. Provide a door with hardware, mounted between 34 and 48 inches high, that is operable with one hand and does not require tight grasping, pinching, or twisting of the wrist and requires no more than 5 pounds of force to operate. Lever-operated mechanisms, push-type mechanisms, and U-shaped handles are acceptable designs. Standards §§ 206.4, 206.5, 309.4, 404.2.7.

ii. The maneuvering clearance on the pull side at the door to the director's office is obstructed. On the pull side of the door, provide maneuvering clearance at least 60 inches deep perpendicular to the doorway and at least 18 inches wide parallel to the doorway on the latch side. Standards §§ 206.5, 404.2.4.1.

b. Single User Toilet Room

i. The toilet room sign lacks Braille and raised characters. Provide a toilet or locker room sign with raised and Braille characters. Tactile signs shall be mounted on the wall adjacent to the latch side of the door or the nearest adjacent wall (except that signs can be mounted on the push side of doors with closers and without hold-open devices); mounted 48 inches minimum from floor to the baseline of the lowest tactile character and 60 inches maximum from the floor to the baseline of the highest tactile character; and located so that a clear floor space of at least 18 inches by 18 inches, centered on the tactile characters, is provided beyond the arc of any door's swing between the closed and 45 degrees open positions. If not all toilet

rooms are accessible, provide signage with the International Symbol of Accessibility at all accessible toilet rooms. Standards §§ 216.2, 703.

ii. The toilet room door has knob hardware. Provide a door with hardware, mounted between 34 and 48 inches high, that is operable with one hand and does not require tight grasping, pinching, or twisting of the wrist and requires no more than 5 pounds of force to operate. Lever-operated mechanisms, push-type mechanisms, and U-shaped handles are acceptable designs. Standards §§ 206.4, 206.5, 309.4, 404.2.7.

iii. The lavatory hot water and drain pipes are not insulated or otherwise configured to protect against contact. Provide water supply and drain pipes insulated or otherwise configured to protect against contact. There shall be no sharp or abrasive surfaces underneath the lavatory or sink. Standards §§ 213.3.4, 606.5.

iv. The toilet seat is 15½ inches above the finished floor and the toilet centerline is 28 inches from the side wall. Provide a toilet with the top of the seat 17 to 19 inches high. The seat shall not be sprung to return to a lifted position. Provide a toilet with its centerline between 16 and 18 inches from the near side wall. Standards §§ 213.3.2, 604.2, 604.4.

v. The farther end of the side grab bar at the toilet is 37 inches from the rear wall and it is 36 inches long. Provide a side grab bar that is at least 42 inches in overall length, with the far end mounted at least 54 inches from the rear wall, and with the closer end no more than 12 inches from the rear wall. Standards §§ 213.3.2, 604.5.1.

15. Within 15 months of the entry of this Consent Decree, the County will complete the following modifications to the **Garberville Library** located at 715 Cedar Street in Garberville.

a. Parking

i. No access aisles are provided in the parking lot. Provide designated accessible parking spaces that are a minimum of 96 inches wide and served by access aisles at least 60 inches wide. Provide van accessible parking spaces that are a minimum of 132 inches wide and served by access aisles at least 60 inches wide, or are a minimum of 96 inches wide and served by access aisles at least 96 inches wide. Standards §§ 208, 502.2, 502.3.1.

ii. The parking reserved for persons with disabilities lacks required signage. At sites with 5 or more parking spaces, provide vertical signs with the International Symbol of Accessibility at all spaces designated as reserved for persons with disabilities, and, at van accessible parking spaces, provide

an additional "van accessible" sign. Mount signs at least 60 inches high to the bottom of the sign. Standards §§ 208, 216.5, 502.6, 703.7.2.1.

b. Accessible Route

i. Ramp. The ramp has a slope of 8.7% at the bottom and 9.2% at the top and no 12 inch extensions are provided at the bottom or top. Provide a ramp that is at least 36 inches wide between handrails, with a slope not exceeding 8.33% and a cross slope not exceeding 2.08%; with level landings at least as wide as the ramp and 60 inches long at the top and bottom of every ramp run. On each side of ramp runs and landings, provide edge protection that consists of either an extended ground surface at least 12 inches beyond the edge of the surface of the ramp or landing, or a curb or barrier that prevents the passage of a 4 inch diameter sphere where any part of the sphere is within 4 inches of the surface. If the ramp is subject to wet conditions, landings shall be designed to prevent the accumulation of water. Standards §§ 206.2, 405, 505.

c. Library

i. The highest part of the magazine display is 68 inches above the finished floor. Operable parts and controls of this element shall be between 15 and 48 inches high and accompanied by clear floor space of 30 by 48 inches that allows a forward or parallel approach by a person using a wheelchair. Standards §§ 205.1, 305, 308.2, 308.3, 309.

d. Drinking Fountain

i. The drinking fountain controls require tight grasping, pinching, or twisting of the wrist and its control requires 12 pounds to operate. Provide a drinking fountain with controls that are operable with one hand, that require 5 pounds of force or less to operate, and that can be operated without tight grasping, pinching, or twisting of the wrist. Standards §§ 211, 602.3, 309.4.

ii. The drinking fountain protrudes into the walkway and is not detectable to a blind person using a cane. Unless protected by a cane detectable barrier, objects with their leading edges between 27 inches and 80 inches high shall not protrude into circulation paths more than 4 inches for wall-mounted elements, or 12 inches for free standing post- or pylon-mounted elements. Protruding objects (and cane-detectable barriers) shall not reduce the clear width of accessible routes or maneuvering spaces below minimum requirements. Standards §§ 206, 307.

e. Toilet rooms

i. Men's

(1) The toilet room sign is not mounted on the wall adjacent to the latch side of the door with Braille and raised characters. Provide a toilet or locker room sign with raised and Braille characters. Tactile signs shall be mounted on the wall adjacent to the latch side of the door or the nearest adjacent wall (except that signs can be mounted on the push side of doors with closers and without hold-open devices); mounted 48 inches minimum from floor to the baseline of the lowest tactile character and 60 inches maximum from the floor to the baseline of the highest tactile character; and located so that a clear floor space of at least 18 inches by 18 inches, centered on the tactile characters, is provided beyond the arc of any door's swing between the closed and 45 degrees open positions. If not all toilet rooms are accessible, provide signage with the International Symbol of Accessibility at all accessible toilet rooms. Standards §§ 216.2, 703.

(2) No accessible mirror is provided. Provide at least one mirror such that, if it is mounted above a lavatory or countertop, it is mounted with the bottom edge of the reflecting surface no more than 40 inches high; or, if it is not mounted above a lavatory or countertop, it is mounted with the bottom edge of the reflecting surface no more than 35 inches high. Standards §§ 213.2, 603.3.

(3) The top of the toilet seat is 16 inches above the finished floor. Provide a toilet with the top of the seat 17 to 19 inches high. The seat shall not be sprung to return to a lifted position. Standards §§ 213.3.2, 604.4.

ii. Women's

(1) The toilet room sign is not mounted on the wall adjacent to the latch side of the door with Braille and raised characters. Provide a toilet room sign with raised and Braille characters. Tactile signs shall be mounted on the wall adjacent to the latch side of the door or the nearest adjacent wall (except that signs can be mounted on the push side of doors with closers and without hold-open devices); mounted 48 inches minimum from floor to the baseline of the lowest tactile character and 60 inches maximum from the floor to the baseline of the highest tactile character; and located so that a clear floor space of at least 18 inches by 18 inches, centered on the tactile characters, is provided beyond the arc of any door's swing between the closed and 45 degrees open positions. If not all toilet rooms are accessible, provide signage with the International Symbol of Accessibility at all accessible toilet rooms. Standards

§§ 216.2, 703.

(2) No accessible mirror is provided. Provide at least one mirror such that, if it is mounted above a lavatory or countertop, it is mounted with the bottom edge of the reflecting surface no more than 40 inches high; or, if it is not mounted above a lavatory or countertop, it is mounted with the bottom edge of the reflecting surface no more than 35 inches high. Standards §§ 213.2, 603.3.

(3) The top of the toilet seat is 16 inches above the finished floor. Provide a toilet with the top of the seat 17 to 19 inches high. The seat shall not be sprung to return to a lifted position. Standards §§ 213.3.2, 604.4.

(4) The toilet flush control is on the closed side. Provide a flush control mounted on the "open" side of the toilet's clear floor space, between 15 and 48 inches high, and requiring a maximum of 5 pounds of force to operate; or provide an automatic flush device. Standards §§ 213.3.2, 309.4, 604.6.

16. Within 15 months of entry of this Consent Decree, the County will complete the following modifications to **Veterans Hall/Municipal Court** located at 483 Conger Street in Garberville.

a. Accessible route

i. No directional signage is provided at the inaccessible entrance. Provide accessible directional signage at inaccessible entrances directing users to the accessible entrance, and provide accessible signage with the International Symbol of Accessibility at all permanent accessible entrances. Standards §§ 216.6, 703.5, 703.7.2.1.

ii. Ramp. Handrails are not provided on both sides of the ramp. On both sides of the ramp, provide handrails that have a diameter between 1¼ and 2 inches or a perimeter between 4 inches and 6¼ inches and a cross section of no more than 2¼ inches such that the handrails are continuous along the full length of the ramp run. Inside handrails on switchbacks or doglegs shall be continuous between runs; handrails shall have a continuous gripping surface extending at least 12 inches beyond the top and bottom of the ramp parallel with the ground surface (except in alterations where extensions would be hazardous due to plan configuration); extensions shall return to the wall, guard, or landing surface (or continue on as handrails); handrails shall not rotate within their fittings; handrails shall be mounted at a consistent height between 34 inches and 38 inches above the ramp surface and at least 1½ inches from the wall; gripping surfaces and adjacent surfaces shall be free of sharp or

abrasive elements and have rounded edges; and gripping surfaces shall not be obstructed along their tops or sides and the bottoms shall not be obstructed for more than 20% of their length and have no horizontal projections occurring closer than 1½ inches from the bottom of the gripping surface (except that the distance between horizontal projections and the bottom of the gripping surface can be reduced by ⅛ inch for each ½ inch of handrail perimeter over 4 inches). Standards §§ 206.2, 405.8, 505.

b. Public Telephone

i. The highest operable part of the telephone is 64 inches above the finished floor, the cord is 28 inches long, no volume control is provided, and the telephone is a protruding object. Provide an accessible telephone with clear floor space of at least 30 inches by 48 inches that allows either a forward or parallel approach such that bases, enclosures, and fixed seats do not impede approaches to the telephone. All operable parts of the telephone shall be mounted between 15 and 48 inches high; volume control shall be provided; the cord shall be at least 29 inches long from the telephone to the handset; and there shall be a picture of a telephone handset with radiating sound waves. Unless protected by a cane detectable barrier, objects with their leading edges between 27 inches and 80 inches high shall not protrude into circulation paths more than 4 inches for wall-mounted elements, or 12 inches for free standing post- or pylon-mounted elements. Protruding objects (and cane-detectable barriers) shall not reduce the clear width of accessible routes or maneuvering spaces below minimum requirements. Standards §§ 206, 217, 305, 307, 309, 703.7.2.3, 704.

c. The top of the Court Clerk's Counter is 42 inches above the finished floor. Provide counters dispersed throughout the facility (dispersion is not required where only 1 counter is provided) on accessible routes such that each counter has a portion extending the same depth as the counter top and no more than 36 inches high. If a parallel approach is provided, the accessible portion of the counter shall be at least 36 inches long (unless the entire counter is less than 36 inches high) and have clear floor space positioned for a parallel approach; if a forward approach is provided, the accessible portion of the counter shall be at least 30 inches long and have knee and toe space provided under the counter and clear floor space positioned for a forward approach. Standards §§ 227.3, 305, 306, 904.4.

d. Toilet Rooms

i. Men's

(1) The toilet room sign is not mounted on the wall adjacent to the

latch side of the door with Braille and raised characters. Provide a toilet sign with raised and Braille characters. Tactile signs shall be mounted on the wall adjacent to the latch side of the door or the nearest adjacent wall (except that signs can be mounted on the push side of doors with closers and without hold-open devices); mounted 48 inches minimum from floor to the baseline of the lowest tactile character and 60 inches maximum from the floor to the baseline of the highest tactile character; and located so that a clear floor space of at least 18 inches by 18 inches, centered on the tactile characters, is provided beyond the arc of any door's swing between the closed and 45 degrees open positions. If not all toilet rooms are accessible, provide signage with the International Symbol of Accessibility at all accessible toilet rooms. Standards §§ 216.2, 703.

(2) The door has knob hardware. Provide a door with hardware, mounted between 34 and 48 inches high, that is operable with one hand and does not require tight grasping, pinching, or twisting of the wrist and requires no more than 5 pounds of force to operate. Lever-operated mechanisms, push-type mechanisms, and U-shaped handles are acceptable designs. Standards §§ 206.4, 206.5, 309.4, 404.2.7.

(3) The lavatory hot water pipes and drain are not insulated or otherwise configured to protect against contact; and the faucet hardware requires tight grasping, pinching, or twisting of the wrist. Provide water supply and drain pipes insulated or otherwise configured to protect against contact. There shall be no sharp or abrasive surfaces underneath the lavatory or sink. Provide a lavatory with a faucet that can be operated with no more than 5 pounds of force and can be used with one hand and without tight grasping, pinching, or twisting of the wrist (lever-operated, push-type, and electronically controlled mechanisms are examples of acceptable designs). Hand-operated metering faucets shall remain open for at least 10 seconds. Standards §§ 213.3.4, 309.4, 606.4, 606.5.

(4) The urinal is inaccessible because the rim is 24 inches above the finished floor and the flush control is mounted 50 inches above the finished floor. Provide a stall-type or a wall-hung urinal with a rim mounted 17 inches high or less; a depth of at least 13½ inches from the outer face to the rear of the urinal; a clear floor space at least 30 inches wide and 48 inches deep positioned for a forward approach; and a flush control between 15 and 48 inches high or an automatic flush. Standards §§ 213.3.3, 305, 308.2, 309.4, 605.

(5) No accessible toilet stall is provided. Provide an accessible toilet compartment at least 60 inches wide and at least 59 inches deep (or at least 56 inches deep with a wall-mounted toilet) such that all of the compartment's elements, including door, door hardware, toilet, size and arrangement, toe clearances, grab bars, controls, and dispensers, comply with the Standards. Standards §§ 213.3.1, 301.1, 404, 604, 604.8.1, 609.

ii. Women's

(1) The toilet room sign is not mounted on the wall adjacent to the latch side of the door with Braille and raised characters. Provide a toilet room sign with raised and Braille characters. Tactile signs shall be mounted on the wall adjacent to the latch side of the door or the nearest adjacent wall (except that signs can be mounted on the push side of doors with closers and without hold-open devices); mounted 48 inches minimum from floor to the baseline of the lowest tactile character and 60 inches maximum from the floor to the baseline of the highest tactile character; and located so that a clear floor space of at least 18 inches by 18 inches, centered on the tactile characters, is provided beyond the arc of any door's swing between the closed and 45 degrees open positions. If not all toilet rooms are accessible, provide signage with the International Symbol of Accessibility at all accessible toilet rooms. Standards §§ 216.2, 703.

(2) The door has knob hardware. Provide a door with hardware, mounted between 34 and 48 inches high, that is operable with one hand and does not require tight grasping, pinching, or twisting of the wrist and requires no more than 5 pounds of force to operate. Lever-operated mechanisms, push-type mechanisms, and U-shaped handles are acceptable designs. Standards §§ 206.4, 206.5, 309.4, 404.2.7.

(3) The lavatory is inaccessible because the hot water pipes and drain are not insulated or otherwise configured to protect against contact; and the faucet hardware requires tight grasping, pinching, or twisting of the wrist. Provide water supply and drain pipes insulated or otherwise configured to protect against contact. There shall be no sharp or abrasive surfaces underneath the lavatory or sink. Provide a lavatory with a faucet that can be operated with no more than 5 pounds of force and can be used with one hand and without tight grasping, pinching, or twisting of the wrist (lever-operated, push-type, and electronically controlled mechanisms are examples of acceptable designs). Hand-operated metering faucets shall remain open for at least 10 seconds. Standards §§ 213.3.4,

309.4, 606.4, 606.5.

(4) No accessible toilet stall is provided. Provide an accessible toilet compartment at least 60 inches wide and at least 59 inches deep (or at least 56 inches deep with a wall-mounted toilet) such that all of the compartment's elements, including door, door hardware, toilet, size and arrangement, toe clearances, grab bars, controls, and dispensers, comply with the Standards. Standards §§ 213.3.1, 301.1, 404, 604, 604.8.1, 609.

iii. The route into both toilet rooms is obstructed by a vending machine. To each area, feature, or element described, provide at least one accessible route that coincides with or is located in the same area as general circulation paths. The accessible route must have a minimum clear width of 36 inches (except that it may narrow to no less than 32 inches for a length of no more than 24 inches), or a minimum clear width of 42 inches if there is a U-turn around an obstruction less than 48 inches wide; have passing spaces at least every 200 feet; have a minimum clear headroom of 80 inches; have a surface that is firm, stable, and slip resistant; have, in the absence of a curb ramp, ramp, elevator, or platform lift, no level changes in excess of ½ inch vertically; have no level changes greater than ¼ inch vertically unless they are beveled with a slope no greater than 50%; and have a running slope no greater than 5% (or have been constructed as a fully accessible ramp) and a cross slope no greater than 2.08%. Standards §§ 206, 301.1, 401.1.

e. Courtroom

i. The door from the hallway into the courtroom has knob hardware. Provide a door with hardware, mounted between 34 and 48 inches high, that is operable with one hand and does not require tight grasping, pinching, or twisting of the wrist and requires no more than 5 pounds of force to operate. Lever-operated mechanisms, push-type mechanisms, and U-shaped handles are acceptable designs. Standards §§ 206.4, 206.5, 309.4, 404.2.7.

ii. No assistive listening devices are available. Provide an assistive listening system. Provide receivers complying with the Standards in accordance with the following chart, and provide signage indicating their availability. Standards §§ 216.10, 219, 703.5, 703.7.2.4, 706.

Seating Capacity of Assembly Area	Number of Required Receivers	Required Receivers Required to be Hearing-Aid Compatible*
50 or less	2	2*

51 to 200	2, plus 1 per 25 seats over 50	2*
201 to 500	2, plus 1 per 25 seats over 50	1 per 4 receivers*
501 to 1000	20, plus 1 per 33 seats over 500	1 per 4 receivers*
1001 to 2000	35, plus 1 per 50 seats over 1000	1 per 4 receivers*
2001 and over	55, plus 1 per 100 seats over 2000	1 per 4 receivers*
* unless all seats are served by an induction loop system, in which case no receivers are required to be hearing aid compatible.		

17. Within 15 months of entry of this Consent Decree, the County will complete the following modifications to the **County Health Offices** located at 727 Cedar Street in Garberville.

a. Accessible Route

i. The entrance door threshold has a 1 inch change in level. Provide an accessible door with a threshold that is no more than ¼ inch high, or is between ¼ inch and ½ inch high (¾ inch high if the threshold is existing or altered) and is beveled with a slope no greater than 50%. Standards §§ 206.5, 302, 303, 404.2.5.

ii. The front entrance door has knob hardware. Provide a door with hardware, mounted between 34 and 48 inches high, that is operable with one hand and does not require tight grasping, pinching, or twisting of the wrist and requires no more than 5 pounds of force to operate. Lever-operated mechanisms, push-type mechanisms, and U-shaped handles are acceptable designs. Standards §§ 206.4, 206.5, 309.4, 404.2.7.

b. Toilet Rooms

i. Women's

(1) The door into the toilet room has knob hardware. Provide a door with hardware, mounted between 34 and 48 inches high, that is operable with one hand and does not require tight grasping, pinching, or twisting of the wrist and requires no more than 5 pounds of force to operate. Lever-operated mechanisms, push-type mechanisms, and U-shaped handles are acceptable designs.

Standards §§ 206.4, 206.5, 309.4, 404.2.7.

(2) The toilet seat cover dispenser controls are mounted at 54 inches above the finished floor over an obstruction. Operable parts and controls of this element shall be no more than 48 inches high for a forward reach, or no more than 44 inches high if over an obstruction between 20 and 25 inches deep (for a forward reach, obstructions may not be deeper than 25 inches and obstructions must allow knee space); or mounted not more than 48 inches high for a side reach, or no more than 46 inches high if over an obstruction between 10 and 24 inches deep (for a side reach, obstruction may not be deeper than 24 inches); and accompanied by clear floor space of 30 inches by 48 inches that allows a forward or parallel approach, respectively, by a person using a wheelchair. Standards §§ 205.1, 305, 308.2, 308.3.

(3) The lavatory is inaccessible because the faucet hardware requires tight grasping, pinching, or twisting of the wrist. Provide a lavatory with a faucet that can be operated with no more than 5 pounds of force and can be used with one hand and without tight grasping, pinching, or twisting of the wrist (lever-operated, push-type, and electronically controlled mechanisms are examples of acceptable designs). Hand-operated metering faucets shall remain open for at least 10 seconds. Standards §§ 213.3.4, 309.4, 606.4.

(4) The toilet seat is 16 inches above the finished floor. Provide a toilet with the top of the seat 17 to 19 inches high. The seat shall not be sprung to return to a lifted position. Standards §§ 213.3.2, 604.4.

(5) The farther end of the side grab bar at the toilet is 50 inches from the rear wall. Provide a side grab bar that is at least 42 inches in overall length, with the far end mounted at least 54 inches from the rear wall, and with the closer end no more than 12 inches from the rear wall. Standards §§ 213.3.2, 604.5.1.

(6) The rear grab bar at the toilet is 32 inches long. Provide a rear grab bar that is at least 36 inches long (except where wall space does not permit it due to the location of a recessed fixture, in which case the grab bar may be 24 inches long and centered on the toilet), extending 12 inches from the toilet centerline on one side and 24 inches from the toilet centerline on the other side (except where an administrative authority requires flush controls to be located in a position that conflicts with the location of the rear grab bar, in which case the bar may be split or shifted to the open side). Standards §§ 213.3.2, 604.5.2.

ii. Men's

(1) The door into the toilet room has knob hardware. Provide a door with hardware, mounted between 34 and 48 inches high, that is operable with one hand and does not require tight grasping, pinching, or twisting of the wrist and requires no more than 5 pounds of force to operate. Lever-operated mechanisms, push-type mechanisms, and U-shaped handles are acceptable designs. Standards §§ 206.4, 206.5, 309.4, 404.2.7.

(2) The toilet seat cover dispenser controls are mounted at 54 inches above the finished floor over an obstruction. Operable parts and controls of this element shall be no more than 48 inches high for a forward reach, or no more than 44 inches high if over an obstruction between 20 and 25 inches deep (for a forward reach, obstructions may not be deeper than 25 inches and obstructions must allow knee space); or mounted not more than 48 inches high for a side reach, or no more than 46 inches high if over an obstruction between 10 and 24 inches deep (for a side reach, obstruction may not be deeper than 24 inches); and accompanied by clear floor space of 30 inches by 48 inches that allows a forward or parallel approach, respectively, by a person using a wheelchair. Standards §§ 205.1, 305, 308.2, 308.3.

(3) The lavatory faucet hardware requires tight grasping, pinching, or twisting of the wrist. Provide a lavatory with a faucet that can be operated with no more than 5 pounds of force and can be used with one hand and without tight grasping, pinching, or twisting of the wrist (lever-operated, push-type, and electronically controlled mechanisms are examples of acceptable designs). Hand-operated metering faucets shall remain open for at least 10 seconds. Standards §§ 213.3.4, 309.4, 606.4.

(4) The toilet seat is 16 inches above the finished floor. Provide a toilet with the top of the seat 17 to 19 inches high. The seat shall not be sprung to return to a lifted position. Standards §§ 213.3.2, 604.4.

(5) The farther end of the side grab bar at the toilet is 50 inches from the rear wall. Provide a side grab bar that is at least 42 inches in overall length, with the far end mounted at least 54 inches from the rear wall, and with the closer end no more than 12 inches from the rear wall. Standards §§ 213.3.2, 604.5.1

(6) The rear grab bar at the toilet is 32 inches long. Provide a rear

grab bar that is at least 36 inches long (except where wall space does not permit it due to the location of a recessed fixture, in which case the grab bar may be 24 inches long and centered on the toilet), extending 12 inches from the toilet centerline on one side and 24 inches from the toilet centerline on the other side (except where an administrative authority requires flush controls to be located in a position that conflicts with the location of the rear grab bar, in which case the bar may be split or shifted to the open side). Standards §§ 213.3.2, 604.5.2.

18. Within 9 months of entry of this Consent Decree, the County will complete the following modifications to the **Sheriff's Substation** located at 648 Locust Street in Garberville.

a. There are 7 parking spaces and none are designated as accessible. On the shortest accessible route to the accessible entrance(s), one (1) van accessible parking space designated as reserved for people with disabilities. Van accessible spaces shall be at least 132 inches wide and served by access aisles at least 60 inches wide, or at least 96 inches wide and served by access aisles at least 96 inches wide. Access aisles shall extend the full length of the parking spaces they serve and shall be marked so as to discourage parking in them. At sites with 5 or more parking spaces, provide vertical signs with the International Symbol of Accessibility at all spaces designated as reserved for persons with disabilities, mounted at least 60 inches high to the bottom of the sign. At van accessible spaces, provide an additional "van accessible" sign mounted at least 60 inches high to the bottom of the sign. All spaces and access aisles for persons with disabilities shall contain no changes in level, with slopes and cross-slopes not exceeding 2.08%, and their surfaces shall be firm, stable, and slip-resistant. If the parking facility does not serve a particular building or facility, provide accessible parking on the shortest accessible route to an accessible pedestrian entrance of the parking facility. If the parking facility serves a building with multiple accessible entrances or multiple buildings or facilities, provide dispersed parking spaces located on an accessible route closest to the accessible entrances. If the parking facility is a parking garage or otherwise has limitations on vertical clearances, provide minimum vertical clearance of 98 inches at the van accessible parking spaces and along at least one vehicle access route to such spaces from site entrances and exits. Standards §§ 208, 302, 502, 703.7.2.1.

b. The top of the service counter is 47 inches above the finished floor. Provide counters dispersed throughout the facility (dispersion is not required where only 1 counter is provided) on accessible routes such that each counter has a portion extending the same depth as the counter top and no more than 36 inches high. If a parallel approach is provided, the accessible portion of the counter shall be at least 36 inches long (unless the entire counter is less than 36 inches high) and have clear floor space positioned for a parallel approach; if a forward approach is provided, the accessible portion of the counter shall be at least 30 inches long and have knee and toe space provided under the counter and clear floor space

positioned for a forward approach. Standards §§ 227.3, 305, 306, 904.4.

19. Within 21 months of entry of this Consent Decree, the County will complete the following modifications to **A.W. Way County Park** located at 36594 Mattole in Petrolia.

a. Accessible Route

i. No accessible routes are provided to any of the amenities in the park. To each area, feature, or element described, provide at least one accessible route that coincides with or is located in the same area as general circulation paths. The accessible route must have a minimum clear width of 36 inches (except that it may narrow to no less than 32 inches for a length of no more than 24 inches), or a minimum clear width of 42 inches if there is a U-turn around an obstruction less than 48 inches wide; have passing spaces at least every 200 feet; have a minimum clear headroom of 80 inches; have a surface that is firm, stable, and slip resistant; have, in the absence of a curb ramp, ramp, elevator, or platform lift, no level changes in excess of ½ inch vertically; have no level changes greater than ¼ inch vertically unless they are beveled with a slope no greater than 50%; and have a running slope no greater than 5% (or have been constructed as a fully accessible ramp) and a cross slope no greater than 2.08%. Standards §§ 206, 301.1, 401.1.

ii. The picnic tables lack the required knee clearance and none is located on an accessible route. At least 5% (but no less than 1) of dining or work surfaces shall be available for use by people with mobility disabilities. Each accessible dining or work surface shall be on an accessible route; with clear floor space 30 inches wide by 48 inches deep positioned for a forward approach; with knee clearance at least 11 inches deep at 9 inches high and at least 8 inches deep at 27 inches high; and with a dining or work surface between 28 inches and 34 inches high. They shall be distributed throughout the facility, if applicable. Standards §§ 226, 305, 306, 902.

b. Toilet Rooms at the front of the park

i. Men's

(1) The toilet room sign is not accessible. Provide a toilet room sign with raised and Braille characters. Tactile signs shall be mounted on the wall adjacent to the latch side of the door or the nearest adjacent wall (except that signs can be mounted on the push side of doors with closers and without hold-open devices); mounted 48 inches minimum from floor to the baseline of the lowest tactile character and 60 inches maximum from the floor to the baseline of

the highest tactile character; and located so that a clear floor space of at least 18 inches by 18 inches, centered on the tactile characters, is provided beyond the arc of any door's swing between the closed and 45 degrees open positions. If not all toilet rooms are accessible, provide signage with the International Symbol of Accessibility at all accessible toilet rooms. Standards §§ 216.2, 703.

(2) The men's toilet room entrance has a clear opening width of 27 inches. Provide a door with a clear opening at least 32 inches wide, measured between the face of the door and the opposite stop, when the door is open 90 degrees. Standards §§ 206.4, 206.5, 404.2.3.

(3) The door into the toilet room has knob hardware. Provide a door with hardware, mounted between 34 and 48 inches high, that is operable with one hand and does not require tight grasping, pinching, or twisting of the wrist and requires no more than 5 pounds of force to operate. Lever-operated mechanisms, push-type mechanisms, and U-shaped handles are acceptable designs. Standards §§ 206.4, 206.5, 309.4, 404.2.7.

(4) The men's toilet room door has a threshold which is higher than ¼ inch and is not beveled. Provide an accessible door with a threshold that is no more than ¼ inch high, or is between ¼ inch and ½ inch high (¾ inch high if the threshold is existing or altered) and is beveled with a slope no greater than 50%. Standards §§ 206.5, 302, 303, 404.2.5.

(5) The surface of the route into the toilet room is not firm, stable, and slip resistant. To each area, feature, or element described, provide at least one accessible route that coincides with or is located in the same area as general circulation paths. The accessible route must have a minimum clear width of 36 inches (except that it may narrow to no less than 32 inches for a length of no more than 24 inches), or a minimum clear width of 42 inches if there is a U-turn around an obstruction less than 48 inches wide; have passing spaces at least every 200 feet; have a minimum clear headroom of 80 inches; have a surface that is firm, stable, and slip resistant; have, in the absence of a curb ramp, ramp, elevator, or platform lift, no level changes in excess of ½ inch vertically; have no level changes greater than ¼ inch vertically unless they are beveled with a slope no greater than 50%; and have a running slope no greater than 5% (or have been constructed as a fully accessible ramp) and a cross slope no greater than 2.08%. Standards §§ 206, 301.1, 401.1.

(6) The men's toilet room contains a number of inaccessible elements and is not accessible to people with disabilities. Provide an accessible toilet room such that all of the room's elements, including signage, door, door hardware, clear floor space, toilet, stall size and arrangement (if any), urinal (if provided), grab bars, lavatory, mirror, controls, and dispensers, comply with the Standards. Standards §§ 204, 205, 206, 213, 216, 225, 301.1, 401.1, 601.1, 703, 811.

ii. Women's

(1) The toilet room sign is not accessible. Provide a toilet room sign with raised and Braille characters. Tactile signs shall be mounted on the wall adjacent to the latch side of the door or the nearest adjacent wall (except that signs can be mounted on the push side of doors with closers and without hold-open devices); mounted 48 inches minimum from floor to the baseline of the lowest tactile character and 60 inches maximum from the floor to the baseline of the highest tactile character; and located so that a clear floor space of at least 18 inches by 18 inches, centered on the tactile characters, is provided beyond the arc of any door's swing between the closed and 45 degrees open positions. If not all toilet rooms are accessible, provide signage with the International Symbol of Accessibility at all accessible toilet rooms. Standards §§ 216.2, 703.

(2) The women's toilet room entrance has a clear opening width of 27 inches. Provide a door with a clear opening at least 32 inches wide, measured between the face of the door and the opposite stop, when the door is open 90 degrees. Standards §§ 206.4, 206.5, 404.2.3.

(3) The door into the toilet room has knob hardware. Provide a door with hardware, mounted between 34 and 48 inches high, that is operable with one hand and does not require tight grasping, pinching, or twisting of the wrist and requires no more than 5 pounds of force to operate. Lever-operated mechanisms, push-type mechanisms, and U-shaped handles are acceptable designs. Standards §§ 206.4, 206.5, 309.4, 404.2.7.

(4) The men's toilet room door has a threshold which is higher than ¼ inch and is not beveled. Provide an accessible door with a threshold that is no more than ¼ inch high, or is between ¼ inch and ½ inch high (¾ inch high if the threshold is existing or altered) and is beveled with a slope no greater than 50%. Standards §§

206.5, 302, 303, 404.2.5.

(5) The surface of the route into the toilet room is not firm, stable, and slip resistant. To each area, feature, or element described, provide at least one accessible route that coincides with or is located in the same area as general circulation paths. The accessible route must have a minimum clear width of 36 inches (except that it may narrow to no less than 32 inches for a length of no more than 24 inches), or a minimum clear width of 42 inches if there is a U-turn around an obstruction less than 48 inches wide; have passing spaces at least every 200 feet; have a minimum clear headroom of 80 inches; have a surface that is firm, stable, and slip resistant; have, in the absence of a curb ramp, ramp, elevator, or platform lift, no level changes in excess of ½ inch vertically; have no level changes greater than ¼ inch vertically unless they are beveled with a slope no greater than 50%; and have a running slope no greater than 5% (or have been constructed as a fully accessible ramp) and a cross slope no greater than 2.08%. Standards §§ 206, 301.1, 401.1.

(6) The women's toilet room contains a number of inaccessible elements and is not accessible to people with disabilities. Provide an accessible toilet room such that all of the room's elements, including signage, door, door hardware, clear floor space, toilet, stall size and arrangement (if any), urinal (if provided), grab bars, lavatory, mirror, controls, and dispensers, comply with the Standards. Standards §§ 204, 205, 206, 213, 216, 225, 301.1, 401.1, 601.1, 703, 811.

c. Toilet room/Showers at rear of park

i. Men's

(1) The toilet room sign is not mounted on the wall adjacent to the latch side of the door and has no Braille and raised characters. Provide a toilet or locker room sign with raised and Braille characters. Tactile signs shall be mounted on the wall adjacent to the latch side of the door or the nearest adjacent wall (except that signs can be mounted on the push side of doors with closers and without hold-open devices); mounted 48 inches minimum from floor to the baseline of the lowest tactile character and 60 inches maximum from the floor to the baseline of the highest tactile character; and located so that a clear floor space of at least 18 inches by 18 inches, centered on the tactile characters, is provided beyond the arc of any door's swing between the closed and 45 degrees open positions. If not all toilet rooms are accessible,

provide signage with the International Symbol of Accessibility at all accessible toilet rooms. Standards §§ 216.2, 703.

(2) The surface of the route into the toilet room is not stable, firm, and slip resistant path. To each area, feature, or element described, provide at least one accessible route that coincides with or is located in the same area as general circulation paths. The accessible route must have a minimum clear width of 36 inches (except that it may narrow to no less than 32 inches for a length of no more than 24 inches), or a minimum clear width of 42 inches if there is a U-turn around an obstruction less than 48 inches wide; have passing spaces at least every 200 feet; have a minimum clear headroom of 80 inches; have a surface that is firm, stable, and slip resistant; have, in the absence of a curb ramp, ramp, elevator, or platform lift, no level changes in excess of ½ inch vertically; have no level changes greater than ¼ inch vertically unless they are beveled with a slope no greater than 50%; and have a running slope no greater than 5% (or have been constructed as a fully accessible ramp) and a cross slope no greater than 2.08%. Standards §§ 206, 301.1, 401.1.

(3) The men's toilet room contains a number of inaccessible elements and is not accessible to people with disabilities. Provide an accessible toilet room such that all of the room's elements, including signage, door, door hardware, clear floor space, toilet, stall size and arrangement (if any), urinal (if provided), grab bars, lavatory, mirror, controls, and dispensers, comply with the Standards. Standards §§ 204, 205, 206, 213, 216, 225, 301.1, 401.1, 601.1, 703, 811.

ii. Women's

(1) The toilet room sign is not mounted on the wall adjacent to the latch side of the door and has no Braille and raised characters. Provide a toilet or locker room sign with raised and Braille characters. Tactile signs shall be mounted on the wall adjacent to the latch side of the door or the nearest adjacent wall (except that signs can be mounted on the push side of doors with closers and without hold-open devices); mounted 48 inches minimum from floor to the baseline of the lowest tactile character and 60 inches maximum from the floor to the baseline of the highest tactile character; and located so that a clear floor space of at least 18 inches by 18 inches, centered on the tactile characters, is provided beyond the arc of any door's swing between the closed and 45 degrees open positions. If not all toilet rooms are accessible, provide signage with the International Symbol of Accessibility at

all accessible toilet rooms. Standards §§ 216.2, 703.

(2) The route into the toilet room is not stable, firm, and slip resistant path. To each area, feature, or element described, provide at least one accessible route that coincides with or is located in the same area as general circulation paths. The accessible route must have a minimum clear width of 36 inches (except that it may narrow to no less than 32 inches for a length of no more than 24 inches), or a minimum clear width of 42 inches if there is a U-turn around an obstruction less than 48 inches wide; have passing spaces at least every 200 feet; have a minimum clear headroom of 80 inches; have a surface that is firm, stable, and slip resistant; have, in the absence of a curb ramp, ramp, elevator, or platform lift, no level changes in excess of ½ inch vertically; have no level changes greater than ¼ inch vertically unless they are beveled with a slope no greater than 50%; and have a running slope no greater than 5% (or have been constructed as a fully accessible ramp) and a cross slope no greater than 2.08%. Standards §§ 206, 301.1, 401.1.

(3) The women's toilet room contains a number of inaccessible elements and is not accessible to people with disabilities. Provide an accessible toilet room such that all of the room's elements, including signage, door, door hardware, clear floor space, toilet, stall size and arrangement (if any), urinal (if provided), grab bars, lavatory, mirror, controls, and dispensers, comply with the Standards. Standards §§ 204, 205, 206, 213, 216, 225, 301.1, 401.1, 601.1, 703, 811.

iii. Showers - Men's and Women's. The showers in men's and women's shower room are inaccessible. Provide a fully accessible transfer or roll-in type shower compartment with the following features: controls that are operable with one hand, without tight grasping, pinching, or twisting of the wrist, that require no more than 5 pounds of force to operate; a shower spray unit with an on/off control with a non-positive shutoff and a hose at least 59 inches long that can be used both as a fixed shower head and as a hand-held shower and that delivers water no hotter than 120 degrees; a curb at the shower entrance that is no higher than ½ inch and, in roll-in showers, is beveled if higher than ¼ inch; enclosures, if any, that do not obstruct controls, faucets, or spray units and do not obstruct transfers from wheelchairs onto shower seats; and grab bars that comply with § 609. If the shower is transfer type, the compartment shall be 36 inches by 36 inches, the entrance shall be at least 36 inches wide, and clearance adjacent to the opening shall be 36 inches wide by 48 inches long measured from the control wall (so that the clearance extends beyond the seat); provide grab bars across the control wall and across the back wall to a point 18 inches from the control wall; provide a rectangular or L-shaped

seat complying with § 610 between 17 and 19 inches high extending from the back wall to within 3 inches of the entry; and provide controls on the wall opposite the seat above the grab bar, between 38 and 48 inches high, on the open side of the compartment. If the shower is roll-in type, the compartment shall be 30 inches minimum by 60 inches minimum, the entrance shall be a minimum of 60 inches wide (or a minimum of 36 inches wide at one end of the long side of the compartment), and clearance adjacent to the opening shall be at least 30 inches wide by 60 inches long; provide grab bars on three walls (unless a seat is provided, in which case grab bars shall be on two walls and there shall be no grab bar above the seat), 6 inches maximum from any adjacent wall; and provide controls mounted above the grab bar, no more than 48 inches high; if a seat is provided, it shall comply with § 610.3 and the controls shall be on the back wall adjacent to the seat within 27 inches of the seat wall (unless the shower opening is 36 inches long, in which case the controls can also be on the back wall opposite the seat). Standards §§ 213.3.6, 608, 609, 610.

20. Within 33 months entry of this Consent Decree, the County will complete the following modifications to the **Humboldt County Fairgrounds** located at 1250 5th Street in Ferndale.

a. Fair Office

i. Parking and Accessible Route

(1) No designated van accessible parking spaces are provided; the designated accessible spaces do not have vertical signage, are not dispersed, and are not on the shortest accessible route to the accessible entrance. Provide a van accessible parking space that is a minimum of 132 inches wide and served by an access aisle at least 60 inches wide, or a minimum of 96 inches wide and served by an access aisle at least 96 inches wide; and designated by a vertical sign with the International Symbol of Accessibility and an additional “van accessible” sign mounted at least 60 inches high to the bottom of the signs (unless there are 4 or fewer total parking spaces, in which case, signage is not required). The space and access aisle shall contain no changes in level, with slopes and cross-slopes not exceeding 2.08%, and shall have surfaces that are firm, stable, and slip-resistant; and the access aisle shall be marked so as to discourage parking in it. Standards §§ 208, 302, 502.

(2) The designated standard accessible spaces have no access aisles, no vertical signs, are not dispersed, and are not on the shortest route. On the shortest accessible route to the accessible entrance(s), provide standard accessible and van accessible parking spaces designated as reserved for people with disabilities, as

required in the following chart. Standard accessible spaces shall be a at least 96 inches wide and served by access aisles at least 60 inches wide. Van accessible spaces shall be at least 132 inches wide and served by access aisles at least 60 inches wide, or at least 96 inches wide and served by access aisles at least 96 inches wide. Access aisles shall extend the full length of the parking spaces they serve and shall be marked so as to discourage parking in them. At sites with 5 or more parking spaces, provide vertical signs with the International Symbol of Accessibility at all spaces designated as reserved for persons with disabilities, mounted at least 60 inches high to the bottom of the sign. At van accessible spaces, provide an additional "van accessible" sign mounted at least 60 inches high to the bottom of the sign. All spaces and access aisles for persons with disabilities shall contain no changes in level, with slopes and cross-slopes not exceeding 2.08%, and their surfaces shall be firm, stable, and slip-resistant. If the parking facility does not serve a particular building or facility, provide accessible parking on the shortest accessible route to an accessible pedestrian entrance of the parking facility. If the parking facility serves a building with multiple accessible entrances or multiple buildings or facilities, provide dispersed parking spaces located on an accessible route closest to the accessible entrances. If the parking facility is a parking garage or otherwise has limitations on vertical clearances, provide minimum vertical clearance of 98 inches at the van accessible parking spaces and along at least one vehicle access route to such spaces from site entrances and exits. Standards §§ 208, 302, 502, 703.7.2.1.

Total Spaces in Lot	Total Accessible Spaces (Including Van Accessible)	Van Accessible Spaces
1 to 25	1	1
26 to 50	2	1
51 to 75	3	1
76 to 100	4	1
101 to 150	5	1
151 to 200	6	1
201 to 300	7	2
301 to 400	8	2
401 to 500	9	2

501 to 1000	2% of total	1 in every 6 accessible spaces
1001 and over	20, plus 1 for each 100 over 1000	1 in every 6 accessible spaces

(3) Ramp. The ramp has a slope of 6.7%, no edge protection is provided; no level landing is provided at the bottom of the ramp, and no handrails are provided. Provide a ramp that is at least 36 inches wide between handrails, with a slope not exceeding 8.33% and a cross slope not exceeding 2.08%; with level landings at least as wide as the ramp and 60 inches long at the top and bottom of every ramp run; with level landings at least 60 inches by 60 inches when the ramp changes direction; and with no changes in level other than the slope and cross-slope. The ramp shall have no run containing a rise greater than 30 inches. On each side of ramp runs and landings, provide edge protection that consists of either an extended ground surface at least 12 inches beyond the edge of the surface of the ramp or landing, or a curb or barrier that prevents the passage of a 4 inch diameter sphere where any part of the sphere is within 4 inches of the surface. On both sides of ramps with rises greater than 6 inches, provide handrails that have a diameter between 1¼ and 2 inches or a perimeter between 4 inches and 6¼ inches and a cross section of no more than 2¼ inches such that the handrails are continuous along the full length of the ramp run. Inside handrails on switchbacks or doglegs shall be continuous between runs; handrails shall have a continuous gripping surface extending at least 12 inches beyond the top and bottom of the ramp parallel with the ground surface; extensions shall return to the wall, guard, or landing surface (or continue on as handrails); handrails shall not rotate within their fittings; handrails shall be mounted at a consistent height between 34 inches and 38 inches above the ramp surface and at least 1½ inches from the wall; gripping surfaces and adjacent surfaces shall be free of sharp or abrasive elements and have rounded edges; and gripping surfaces shall not be obstructed along their tops or sides and the bottoms shall not be obstructed for more than 20% of their length and have no horizontal projections occurring closer than 1½ inches from the bottom of the gripping surface (except that the distance between horizontal projections and the bottom of the gripping surface can be reduced by ⅛ inch for each ½ inch of handrail perimeter over 4 inches). If the ramp is subject to wet conditions, landings shall be designed to prevent the accumulation of water. Standards §§ 206.2, 405, 505.

ii. Ticket Counter, Entrance, and Office

(1) The ticket window counters are mounted at 44 inches above the finished floor and no lower counter is provided. Provide counters dispersed throughout the facility (dispersion is not required where only 1 counter is provided) on accessible routes such that each counter has a portion extending the same depth as the counter top and no more than 36 inches high. If a parallel approach is provided, the accessible portion of the counter shall be at least 36 inches long (unless the entire counter is less than 36 inches high) and have clear floor space positioned for a parallel approach; if a forward approach is provided, the accessible portion of the counter shall be at least 30 inches long and have knee and toe space provided under the counter and clear floor space positioned for a forward approach. Standards §§ 227.3, 305, 306, 904.4.

(2) Office

(a) The door to the Fair Office has knob hardware. Provide a door with hardware, mounted between 34 and 48 inches high, that is operable with one hand and does not require tight grasping, pinching, or twisting of the wrist and requires no more than 5 pounds of force to operate. Lever-operated mechanisms, push-type mechanisms, and U-shaped handles are acceptable designs. Standards §§ 206.4, 206.5, 309.4, 404.2.7.

(b) The top of the counter in the Fair Office is 43 inches above the finished floor. Provide counters dispersed throughout the facility (dispersion is not required where only 1 counter is provided) on accessible routes such that each counter has a portion extending the same depth as the counter top and no more than 36 inches high. If a parallel approach is provided, the accessible portion of the counter shall be at least 36 inches long (unless the entire counter is less than 36 inches high) and have clear floor space positioned for a parallel approach; if a forward approach is provided, the accessible portion of the counter shall be at least 30 inches long and have knee and toe space provided under the counter and clear floor space positioned for a forward approach. Standards §§ 227.3, 305, 306, 904.4.

b. Telephone. The counter at the telephone at the Sheep Barn is 22 inches wide, the highest operable part of the phone is 56 inches above the finished floor, no volume control and no signage are provided. Provide accessible telephones in accordance with the following chart with clear floor space of at least 30 inches by 48 inches that allows either a forward or parallel approach such that bases, enclosures, and fixed seats do not impede approaches to the telephone. All

operable parts of the telephone shall be mounted between 15 and 48 inches high; volume control shall be provided; the cord shall be at least 29 inches long from the telephone to the handset; and there shall be a picture of a telephone handset with radiating sound waves. Standards §§ 217, 305, 309, 703.7.2.3, 704.

c. Dairy Barn

i. Accessible route. The surface of the route to the Dairy Barn is not level and stable, firm and slip resistant. To each area, feature, or element described, provide at least one accessible route that coincides with or is located in the same area as general circulation paths. The accessible route must have a minimum clear width of 36 inches (except that it may narrow to no less than 32 inches for a length of no more than 24 inches), or a minimum clear width of 42 inches if there is a U-turn around an obstruction less than 48 inches wide; have passing spaces at least every 200 feet; have a minimum clear headroom of 80 inches; have a surface that is firm, stable, and slip resistant; have, in the absence of a curb ramp, ramp, elevator, or platform lift, no level changes in excess of ½ inch vertically; have no level changes greater than ¼ inch vertically unless they are beveled with a slope no greater than 50%; and have a running slope no greater than 5% (or have been constructed as a fully accessible ramp) and a cross slope no greater than 2.08%. Standards §§ 206, 301.1, 401.1.

d. Horse Barn Arena

i. Accessible route. The route into the arena is not level and stable, firm and slip resistant. To each area, feature, or element described, provide at least one accessible route that coincides with or is located in the same area as general circulation paths. The accessible route must have a minimum clear width of 36 inches (except that it may narrow to no less than 32 inches for a length of no more than 24 inches), or a minimum clear width of 42 inches if there is a U-turn around an obstruction less than 48 inches wide; have passing spaces at least every 200 feet; have a minimum clear headroom of 80 inches; have a surface that is firm, stable, and slip resistant; have, in the absence of a curb ramp, ramp, elevator, or platform lift, no level changes in excess of ½ inch vertically; have no level changes greater than ¼ inch vertically unless they are beveled with a slope no greater than 50%; and have a running slope no greater than 5% (or have been constructed as a fully accessible ramp) and a cross slope no greater than 2.08%. Standards §§ 206, 301.1, 401.1.

ii. The arena does not provide wheelchair seating with fixed companion seating. Provide the number of wheelchair spaces shown in the following chart. Where provided, each luxury box, club box, and suite shall contain wheelchair spaces in accordance with the following chart; and at least 20% of all other boxes shall also contain wheelchair spaces in accordance

with the following chart. Standards § 221.2.

Dimensions. Each wheelchair space shall have minimum clear ground or floor space of 36 inches wide by 48 inches deep when approachable from the front or rear, or 36 inches wide by 60 inches deep when approachable only from the side (spaces need only be 33 inches wide if adjacent to another wheelchair space). The ground or floor at all wheelchair spaces shall be level, firm, stable and slip resistant; wheelchair spaces shall not overlap circulation paths; and at least one companion seat shall be provided next to each wheelchair space. Ensure that wheelchair spaces and companion seats are not located on (or obstructed by) temporary platforms or other movable structures. 28 C.F.R. § 35.151(g); Standards §§ 221.2, 221.3, 802.1.

Integration / Lines of Sight. Wheelchair spaces shall be an integral part of the seating plan and shall provide spectators with choices of seating locations and viewing angles that are substantially equivalent to, or better than, the choices of seating locations and viewing angles available to all other spectators. In stadiums where spectators can be expected to stand during the show or event (for example, football, baseball, basketball games, or rock concerts), the wheelchair spaces shall provide lines of sight over standing spectators. Standards §§ 221.2, 802.2.

Dispersion. When the seating capacity exceeds 300, wheelchair spaces and companion seats shall be horizontally and vertically dispersed. Ensure that wheelchair spaces and companion seats are dispersed to all levels that include seating served by an accessible route. Wheelchair spaces and companion seats shall be dispersed vertically at varying distances from the screen, performance area, or playing field, including locations in each balcony or mezzanine located on an accessible route. Assembly areas that (1) have seating encircling, in whole or in part, a field of play or performance area, and (2) are required to horizontally disperse wheelchair spaces and companion seats, shall disperse wheelchair spaces and companion seats around that field of play or performance area. 28 C.F.R. § 35.151(g), Standards § 221.2.3.

Companion Seats. In row seating, companion seats shall be located to provide shoulder alignment with adjacent wheelchair spaces. The shoulder alignment point of the wheelchair space shall be measured 36 inches from the front of the wheelchair space. The floor surface of the companion seat shall be the same elevation as the floor surface of the wheelchair space. Companion seats shall be equivalent in size, quality, comfort, and amenities to the seating in the immediate area. Companion seats may be fixed or movable. Standards § 221.3.

Aisle Seats. At least 5% of the total number of aisle seats shall provide

folding or retractable armrests on the aisle side of the seat, shall be identified by a sign or marker, and shall be the aisle seats closest to accessible routes. Standards §§ 221.4, 802.4.

Seating Capacity of Assembly Area	Number of Required Wheelchair Spaces
4 to 25	1
26 to 50	2
51 to 150	4
151 to 300	5
301 to 500	6
501 to 5000	6, plus 1 for each 150 between 501 through 5000
5001 and over	36, plus 1 for each 200 over 5000

iii. The ramp has a slope of 11.1% on the first leg and 9.3% on the second leg; the landings at the top and bottom of the ramp are not stable, firm, and slip resistant; the mid-landing is 46 inches wide; and the handrails are 42 inches high, have no 12 inch extensions at the top or bottom of the ramp, and do not return smoothly to the wall or ground. Provide a ramp that is at least 36 inches wide between handrails, with a slope not exceeding 8.33% and a cross slope not exceeding 2.08%; with level landings at least as wide as the ramp and 60 inches long at the top and bottom of every ramp run; with level landings at least 60 inches by 60 inches when the ramp changes direction; and with no changes in level other than the slope and cross-slope. The ramp shall have no run containing a rise greater than 30 inches. On each side of ramp runs and landings, provide edge protection that consists of either an extended ground surface at least 12 inches beyond the edge of the surface of the ramp or landing, or a curb or barrier that prevents the passage of a 4 inch diameter sphere where any part of the sphere is within 4 inches of the surface. On both sides of ramps with rises greater than 6 inches, provide handrails that have a diameter between 1¼ and 2 inches or a perimeter between 4 inches and 6¼ inches and a cross section of no more than 2¼ inches such that the handrails are continuous along the full length of the ramp run. Inside handrails on switchbacks or doglegs shall be continuous between runs; handrails shall have a continuous gripping surface extending at least 12 inches beyond the top and bottom of the ramp parallel with the ground surface; extensions shall return to the wall, guard, or landing surface (or continue on as handrails); handrails shall not rotate within their fittings; handrails shall be mounted at a consistent height between 34 inches and 38 inches above the ramp

surface and at least 1½ inches from the wall; gripping surfaces and adjacent surfaces shall be free of sharp or abrasive elements and have rounded edges; and gripping surfaces shall not be obstructed along their tops or sides and the bottoms shall not be obstructed for more than 20% of their length and have no horizontal projections occurring closer than 1½ inches from the bottom of the gripping surface (except that the distance between horizontal projections and the bottom of the gripping surface can be reduced by ⅛ inch for each ½ inch of handrail perimeter over 4 inches). If the ramp is subject to wet conditions, landings shall be designed to prevent the accumulation of water. Standards §§ 206.2, 405, 505.

e. Carnival Toilet Rooms

i. The toilet rooms are not accessible and there is no directional signage to the closest accessible toilet rooms. Provide accessible directional signage with the International Symbol of Accessibility at inaccessible toilet rooms indicating the location of the nearest accessible toilet room, and provide accessible signage with the International Symbol of Accessibility at all accessible toilet rooms. Standards §§ 216.3, 216.8, 703.5, 703.7.2.1.

f. Hindley Hall

i. Toilet Rooms

(1) Women's

(a) The toilet room sign is not mounted on the wall adjacent to the latch side of the door with Braille and raised characters. Provide a toilet or locker room sign with raised and Braille characters. Tactile signs shall be mounted on the wall adjacent to the latch side of the door or the nearest adjacent wall (except that signs can be mounted on the push side of doors with closers and without hold-open devices); mounted 48 inches minimum from floor to the baseline of the lowest tactile character and 60 inches maximum from the floor to the baseline of the highest tactile character; and located so that a clear floor space of at least 18 inches by 18 inches, centered on the tactile characters, is provided beyond the arc of any door's swing between the closed and 45 degrees open positions. If not all toilet rooms are accessible, provide signage with the International Symbol of Accessibility at all accessible toilet rooms. Standards §§ 216.2, 703.

(b) The door into the toilet room has a clear opening width of 29 inches. Provide a door with a clear opening at least 32

inches wide, measured between the face of the door and the opposite stop, when the door is open 90 degrees. Standards §§ 206.4, 206.5, 404.2.3.

(c) No accessible mirror is provided. Provide at least one mirror such that, if it is mounted above a lavatory or countertop, it is mounted with the bottom edge of the reflecting surface no more than 40 inches high; or, if it is not mounted above a lavatory or countertop, it is mounted with the bottom edge of the reflecting surface no more than 35 inches high. Standards §§ 213.2, 603.3.

(d) The paper towel dispenser controls are mounted at 61 inches above the finished floor. Operable parts and controls of this element shall be between 15 and 48 inches high and accompanied by clear floor space of 30 by 48 inches that allows a forward or parallel approach by a person using a wheelchair. Standards §§ 205.1, 305, 308.2, 308.3, 309.

(e) The lavatory faucet hardware requires tight grasping, pinching, or twisting of the wrist. Provide a lavatory with a faucet that can be operated with no more than 5 pounds of force and can be used with one hand and without tight grasping, pinching, or twisting of the wrist (lever-operated, push-type, and electronically controlled mechanisms are examples of acceptable designs). Hand-operated metering faucets shall remain open for at least 10 seconds. Standards §§ 213.3.4, 309.4, 606.4.

(f) No accessible toilet stall is provided. Provide an accessible toilet compartment at least 60 inches wide and at least 59 inches deep (or at least 56 inches deep with a wall-mounted toilet) such that all of the compartment's elements, including door, door hardware, toilet, size and arrangement, toe clearances, grab bars, controls, and dispensers, comply with the Standards. Standards §§ 213.3.1, 301.1, 404, 604, 604.8.1, 609.

(2) Men's

(a) The toilet room sign is not mounted on the wall adjacent to the latch side of the door with Braille and raised characters. Provide a toilet or locker room sign with raised and Braille characters. Tactile signs shall be mounted on the wall adjacent to the latch side of the door or the nearest adjacent

wall (except that signs can be mounted on the push side of doors with closers and without hold-open devices); mounted 48 inches minimum from floor to the baseline of the lowest tactile character and 60 inches maximum from the floor to the baseline of the highest tactile character; and located so that a clear floor space of at least 18 inches by 18 inches, centered on the tactile characters, is provided beyond the arc of any door's swing between the closed and 45 degrees open positions. If not all toilet rooms are accessible, provide signage with the International Symbol of Accessibility at all accessible toilet rooms. Standards §§ 216.2, 703.

(b) The door into the toilet room has a clear opening width of 29 inches. Provide a door with a clear opening at least 32 inches wide, measured between the face of the door and the opposite stop, when the door is open 90 degrees. Standards §§ 206.4, 206.5, 404.2.3.

(c) No accessible mirror is provided. Provide at least one mirror such that, if it is mounted above a lavatory or countertop, it is mounted with the bottom edge of the reflecting surface no more than 40 inches high; or, if it is not mounted above a lavatory or countertop, it is mounted with the bottom edge of the reflecting surface no more than 35 inches high. Standards §§ 213.2, 603.3.

(d) The lavatory faucet hardware requires tight grasping, pinching, or twisting of the wrist. Provide a lavatory with a faucet that can be operated with no more than 5 pounds of force and can be used with one hand and without tight grasping, pinching, or twisting of the wrist (lever-operated, push-type, and electronically controlled mechanisms are examples of acceptable designs). Hand-operated metering faucets shall remain open for at least 10 seconds. Standards §§ 213.3.4, 309.4, 606.4.

(e) No accessible toilet stall is provided. Provide an accessible toilet compartment at least 60 inches wide and at least 59 inches deep (or at least 56 inches deep with a wall-mounted toilet) such that all of the compartment's elements, including door, door hardware, toilet, size and arrangement, toe clearances, grab bars, controls, and dispensers, comply with the Standards. Standards §§ 213.3.1, 301.1, 404, 604, 604.8.1, 609.

ii. Accessible Route

(1) The entrance into Hindley Hall has a clear opening width of 30 inches. Provide a door with a clear opening at least 32 inches wide, measured between the face of the door and the opposite stop, when the door is open 90 degrees. Standards §§ 206.4, 206.5, 404.2.3.

(2) Ramps to front entrance. The ramp lacks handrails. On both sides of the ramp, provide handrails that have a diameter between 1¼ and 2 inches or a perimeter between 4 inches and 6¼ inches and a cross section of no more than 2¼ inches such that the handrails are continuous along the full length of the ramp run. Inside handrails on switchbacks or doglegs shall be continuous between runs; handrails shall have a continuous gripping surface extending at least 12 inches beyond the top and bottom of the ramp parallel with the ground surface (except in alterations where extensions would be hazardous due to plan configuration); extensions shall return to the wall, guard, or landing surface (or continue on as handrails); handrails shall not rotate within their fittings; handrails shall be mounted at a consistent height between 34 inches and 38 inches above the ramp surface and at least 1½ inches from the wall; gripping surfaces and adjacent surfaces shall be free of sharp or abrasive elements and have rounded edges; and gripping surfaces shall not be obstructed along their tops or sides and the bottoms shall not be obstructed for more than 20% of their length and have no horizontal projections occurring closer than 1½ inches from the bottom of the gripping surface (except that the distance between horizontal projections and the bottom of the gripping surface can be reduced by ⅛ inch for each ½ inch of handrail perimeter over 4 inches). Standards §§ 206.2, 405.8, 505.

(3) Ramp to men's toilet room. The ramp has a slope of 11.8% and lacks handrails. Provide a ramp with a slope no greater than 8.33%, unless there are space limitations and the ramp serves an existing site, building, or facility, and has a rise of no more than 6 inches. For a ramp with a maximum rise of 6 inches, the slope shall be no steeper 10%. Ramps with a maximum rise of 3 inches, the slope shall be no more than 12.5%. On both sides of the ramp, provide handrails that have a diameter between 1¼ and 2 inches or a perimeter between 4 inches and 6¼ inches and a cross section of no more than 2¼ inches such that the handrails are continuous along the full length of the ramp run. Inside handrails on switchbacks or doglegs shall be continuous between runs; handrails shall have a continuous gripping surface extending at least 12 inches beyond the top and bottom of the ramp parallel with

the ground surface (except in alterations where extensions would be hazardous due to plan configuration); extensions shall return to the wall, guard, or landing surface (or continue on as handrails); handrails shall not rotate within their fittings; handrails shall be mounted at a consistent height between 34 inches and 38 inches above the ramp surface and at least 1½ inches from the wall; gripping surfaces and adjacent surfaces shall be free of sharp or abrasive elements and have rounded edges; and gripping surfaces shall not be obstructed along their tops or sides and the bottoms shall not be obstructed for more than 20% of their length and have no horizontal projections occurring closer than 1½ inches from the bottom of the gripping surface (except that the distance between horizontal projections and the bottom of the gripping surface can be reduced by ⅛ inch for each ½ inch of handrail perimeter over 4 inches). Standards §§ 206.2, 405.2, 405.8, 505.

(4) Ramp to women's toilet room. The ramp has a slope of 9.1% and lacks handrails. Provide a ramp with a slope no greater than 8.33%, unless there are space limitations and the ramp serves an existing site, building, or facility, and has a rise of no more than 6 inches. For a ramp with a maximum rise of 6 inches, the slope shall be no steeper 10%. Ramps with a maximum rise of 3 inches, the slope shall be no more than 12.5%. On both sides of the ramp, provide handrails that have a diameter between 1¼ and 2 inches or a perimeter between 4 inches and 6¼ inches and a cross section of no more than 2¼ inches such that the handrails are continuous along the full length of the ramp run. Inside handrails on switchbacks or doglegs shall be continuous between runs; handrails shall have a continuous gripping surface extending at least 12 inches beyond the top and bottom of the ramp parallel with the ground surface (except in alterations where extensions would be hazardous due to plan configuration); extensions shall return to the wall, guard, or landing surface (or continue on as handrails); handrails shall not rotate within their fittings; handrails shall be mounted at a consistent height between 34 inches and 38 inches above the ramp surface and at least 1½ inches from the wall; gripping surfaces and adjacent surfaces shall be free of sharp or abrasive elements and have rounded edges; and gripping surfaces shall not be obstructed along their tops or sides and the bottoms shall not be obstructed for more than 20% of their length and have no horizontal projections occurring closer than 1½ inches from the bottom of the gripping surface (except that the distance between horizontal projections and the bottom of the gripping surface can be reduced by ⅛ inch for each ½ inch of handrail perimeter over 4 inches). Standards §§ 206.2, 405.2, 405.8, 505.

iii. Telephone

(1) The lower telephone at Hindley Hall has a counter 44 inches above the finished floor; the highest operable part is 56 inches above the finished floor; no volume control is provided; and no sign is provided. Provide an accessible telephone with clear floor space of at least 30 inches by 48 inches that allows either a forward or parallel approach such that bases, enclosures, and fixed seats do not impede approaches to the telephone. All operable parts of the telephone shall be mounted between 15 and 48 inches high; volume control shall be provided; the cord shall be at least 29 inches long from the telephone to the handset; and there shall be a picture of a telephone handset with radiating sound waves. Standards §§ 217, 305, 309, 703.7.2.3, 704.

(2) The higher wall-mounted telephone protrudes into the main walkway and is not detectable to a blind person using a cane. Unless protected by a cane detectable barrier, objects with their leading edges between 27 inches and 80 inches high shall not protrude into circulation paths more than 4 inches for wall-mounted elements, or 12 inches for free standing post- or pylon-mounted elements. Protruding objects (and cane-detectable barriers) shall not reduce the clear width of accessible routes or maneuvering spaces below minimum requirements. Standards §§ 206, 307.

g. School Museum

i. Accessible Route

(1) The entrance into the museum has a clear opening width of 26 inches with a single leaf open. Provide a door that has at least one active leaf with a clear opening at least 32 inches wide when measured from the face of the door to the edge of the other door when one door is opened 90 degrees OR provide an automatic opener that opens both doors simultaneously, even with the power off. Automatic door opener operating devices shall be easy to operate with one hand; shall not require tight grasping, pinching, or twisting of the wrist to operate; shall not require more than 5 pounds of force to operate; shall be mounted between 15 and 48 inches high on an accessible route; and shall be accompanied by a clear floor space that is 48 inches by 30 inches and is beyond the arc of the door's swing. Standards §§ 206.5, 305, 308, 309.4, 404.2.3, 404.3.1.

(2) The entry door has a 4 inch change in level at the threshold to the

door. Provide an accessible door with a threshold that is no more than ¼ inch high, or is between ¼ inch and ½ inch high (¾ inch high if the threshold is existing or altered) and is beveled with a slope no greater than 50%. Standards §§ 206.5, 302, 303, 404.2.5.

(3) The entry door has knob hardware. Provide a door with hardware, mounted between 34 and 48 inches high, that is operable with one hand and does not require tight grasping, pinching, or twisting of the wrist and requires no more than 5 pounds of force to operate. Lever-operated mechanisms, push-type mechanisms, and U-shaped handles are acceptable designs. Standards §§ 206.4, 206.5, 309.4, 404.2.7.

h. Friendship Square/ Mabel's Kitchen

i. Accessible Route

(1) The surface of the route to Mabel's Kitchen is not stable, firm and slip resistant. To each area, feature, or element described, provide at least one accessible route that coincides with or is located in the same area as general circulation paths. The accessible route must have a minimum clear width of 36 inches (except that it may narrow to no less than 32 inches for a length of no more than 24 inches), or a minimum clear width of 42 inches if there is a U-turn around an obstruction less than 48 inches wide; have passing spaces at least every 200 feet; have a minimum clear headroom of 80 inches; have a surface that is firm, stable, and slip resistant; have, in the absence of a curb ramp, ramp, elevator, or platform lift, no level changes in excess of ½ inch vertically; have no level changes greater than ¼ inch vertically unless they are beveled with a slope no greater than 50%; and have a running slope no greater than 5% (or have been constructed as a fully accessible ramp) and a cross slope no greater than 2.08%. Standards §§ 206, 301.1, 401.1.

(2) The slope of the built-up curb ramp to the entrance is 13.4%. Provide a curb ramp that has a maximum slope of 8.33%, a maximum cross slope of 2.08%, and a maximum counter (*i.e.*, gutter) slope of 5%; is located so that it cannot be obstructed by parked vehicles; does not project into traffic, parking spaces or access aisles; and has transitions on and off that are on the same level. Flared sides, if provided, shall have a maximum slope of 10%. Standards §§ 206.2.1, 406.

(3) The entry door into Mabel's has a one inch change in level at the threshold. Provide an accessible door with a threshold that is no

more than ¼ inch high, or is between ¼ inch and ½ inch high (¾ inch high if the threshold is existing or altered) and is beveled with a slope no greater than 50%. Standards §§ 206.5, 302, 303, 404.2.5.

(4) The entry door has knob hardware. Provide a door with hardware, mounted between 34 and 48 inches high, that is operable with one hand and does not require tight grasping, pinching, or twisting of the wrist and requires no more than 5 pounds of force to operate. Lever-operated mechanisms, push-type mechanisms, and U-shaped handles are acceptable designs. Standards §§ 206.4, 206.5, 309.4, 404.2.7.

ii. Stage at Friendship Square

(1) Ramp

(a) The ramp has a slope of 12.1% on the first leg and 8.7% on the second leg; no edge protection is provided; handrails are not provided on both sides of the ramp; the one handrail provided is mounted 32 inches above the finished floor, does not have 12 inch extensions at the top or bottom of the ramp, has a diameter greater than 1.5 inches and it does not return smoothly to the wall or ground. Provide a ramp that is at least 36 inches wide between handrails, with a slope not exceeding 8.33% and a cross slope not exceeding 2.08%; with level landings at least as wide as the ramp and 60 inches long at the top and bottom of every ramp run; with level landings at least 60 inches by 60 inches when the ramp changes direction; and with no changes in level other than the slope and cross-slope. The ramp shall have no run containing a rise greater than 30 inches. On each side of ramp runs and landings, provide edge protection that consists of either an extended ground surface at least 12 inches beyond the edge of the surface of the ramp or landing, or a curb or barrier that prevents the passage of a 4 inch diameter sphere where any part of the sphere is within 4 inches of the surface. On both sides of ramps with rises greater than 6 inches, provide handrails that have a diameter between 1¼ and 2 inches or a perimeter between 4 inches and 6¼ inches and a cross section of no more than 2¼ inches such that the handrails are continuous along the full length of the ramp run. Inside handrails on switchbacks or doglegs shall be continuous between runs; handrails shall have a continuous gripping surface extending at least 12 inches beyond the top and bottom of

the ramp parallel with the ground surface; extensions shall return to the wall, guard, or landing surface (or continue on as handrails); handrails shall not rotate within their fittings; handrails shall be mounted at a consistent height between 34 inches and 38 inches above the ramp surface and at least 1½ inches from the wall; gripping surfaces and adjacent surfaces shall be free of sharp or abrasive elements and have rounded edges; and gripping surfaces shall not be obstructed along their tops or sides and the bottoms shall not be obstructed for more than 20% of their length and have no horizontal projections occurring closer than 1½ inches from the bottom of the gripping surface (except that the distance between horizontal projections and the bottom of the gripping surface can be reduced by ⅛ inch for each ½ inch of handrail perimeter over 4 inches). If the ramp is subject to wet conditions, landings shall be designed to prevent the accumulation of water. Standards §§ 206.2, 405, 505.

iii. Single User Toilet Rooms at Friendship Square

(1) Men's

(a) The surface of the route to the men's toilet room is not stable, firm, and slip resistant. To each area, feature, or element described, provide at least one accessible route that coincides with or is located in the same area as general circulation paths. The accessible route must have a minimum clear width of 36 inches (except that it may narrow to no less than 32 inches for a length of no more than 24 inches), or a minimum clear width of 42 inches if there is a U-turn around an obstruction less than 48 inches wide; have passing spaces at least every 200 feet; have a minimum clear headroom of 80 inches; have a surface that is firm, stable, and slip resistant; have, in the absence of a curb ramp, ramp, elevator, or platform lift, no level changes in excess of ½ inch vertically; have no level changes greater than ¼ inch vertically unless they are beveled with a slope no greater than 50%; and have a running slope no greater than 5% (or have been constructed as a fully accessible ramp) and a cross slope no greater than 2.08%. Standards §§ 206, 301.1, 401.1.

(b) The toilet room sign is not mounted on the wall adjacent to the latch side of the door and does not have Braille and raised characters. Provide a toilet or locker room sign with

raised and Braille characters. Tactile signs shall be mounted on the wall adjacent to the latch side of the door or the nearest adjacent wall (except that signs can be mounted on the push side of doors with closers and without hold-open devices); mounted 48 inches minimum from floor to the baseline of the lowest tactile character and 60 inches maximum from the floor to the baseline of the highest tactile character; and located so that a clear floor space of at least 18 inches by 18 inches, centered on the tactile characters, is provided beyond the arc of any door's swing between the closed and 45 degrees open positions. If not all toilet rooms are accessible, provide signage with the International Symbol of Accessibility at all accessible toilet rooms. Standards §§ 216.2, 703.

(c) The door into the toilet room has a clear opening width of 29 inches and has knob hardware. Provide a door with a clear opening at least 32 inches wide, measured between the face of the door and the opposite stop, when the door is open 90 degrees. Provide a door with hardware, mounted between 34 and 48 inches high, that is operable with one hand and does not require tight grasping, pinching, or twisting of the wrist and requires no more than 5 pounds of force to operate. Lever-operated mechanisms, push-type mechanisms, and U-shaped handles are acceptable designs. Standards §§ 206.4, 206.5, 309.4, 404.2.3, 404.2.7.

(d) The door, which is accessed through a front approach, has nine inches of clear floor space on the latch side, pull side of the door. On the pull side of the door, provide maneuvering clearance at least 60 inches deep perpendicular to the doorway and at least 18 inches (24 inches is preferred) of maneuvering clearance on the latch side of the door. Standards §§ 206.5, 404.2.4.1.

(e) The toilet room entrance has a 5 inch change in level. Provide an accessible door with a threshold that is no more than ¼ inch high, or is between ¼ inch and ½ inch high (¾ inch high if the threshold is existing or altered) and is beveled with a slope no greater than 50%. Standards §§ 206.5, 302, 303, 404.2.5.

(f) The light switch is mounted at 57 inches above the finished floor. Operable parts and controls of this element shall be between 15 and 48 inches high and accompanied by clear floor space of 30 by 48 inches that allows a forward or

parallel approach by a person using a wheelchair. Standards §§ 205.1, 305, 308.2, 308.3, 309.

(g) Insufficient turning space is provided within the toilet room. Provide an unobstructed turning space at least 60 inches in diameter or a T-shaped space complying with § 304.3.2. Standards §§ 213.2, 304.3, 603.2.1.

(h) The paper towel dispenser controls are mounted at 65 inches above the finished floor with a forward reach required. Operable parts and controls of this element shall be between 15 and 48 inches high and accompanied by clear floor space of 30 by 48 inches that allows a forward or parallel approach by a person using a wheelchair. Standards §§ 205.1, 305, 308.2, 308.3, 309.

(i) The lavatory water supply and drain pipes are not covered or otherwise configured to protect against contact, there is insufficient clear floor space, and the faucet hardware requires tight grasping, twisting, or turning of the wrist. Provide water supply and drain pipes insulated or otherwise configured to protect against contact. There shall be no sharp or abrasive surfaces underneath the lavatory or sink. Provide a lavatory with clear floor space at least 30 inches wide by 48 inches deep positioned for a forward approach. Provide a lavatory with a faucet that can be operated with no more than 5 pounds of force and can be used with one hand and without tight grasping, pinching, or twisting of the wrist (lever-operated, push-type, and electronically controlled mechanisms are examples of acceptable designs). Hand-operated metering faucets shall remain open for at least 10 seconds. Standards §§ 213.3.4, 305, 309.4, 606.4, 606.5.

(j) The toilet seat is mounted 14 inches above the finished floor and the centerline is 22 inches from the side wall. Provide a toilet with the top of the seat 17 to 19 inches high. The seat shall not be sprung to return to a lifted position. Provide a toilet with its centerline between 16 and 18 inches from the near side wall. Standards §§ 213.3.2, 604.2, 604.4.

(k) The toilet flush control is on the closed side. Provide a flush control mounted on the “open” side of the toilet’s clear floor space, between 15 and 48 inches high, and requiring a maximum of 5 pounds of force to operate; or

provide an automatic flush device. Standards §§ 213.3.2, 309.4, 604.6.

(l) No grab bars are provided at the toilet. Provide a rear grab bar that is at least 36 inches long (except where wall space does not permit it due to the location of a recessed fixture, in which case the grab bar may be 24 inches long), extending 12 inches from the toilet centerline on one side and 24 inches on the other side (except where an administrative authority requires flush controls to be located in a position that conflicts with the location of the rear grab bar, in which case the bar may be split or shifted to the open side). Provide a side grab bar that is at least 42 inches in overall length, with the far end mounted at least 54 inches from the rear wall and the closer end no more than 12 inches from the rear wall. Grab bars shall be mounted between 33 and 36 inches high to the top of the gripping surface; with a diameter between 1¼ and 2 inches (or, if the grab bar is not circular, a perimeter between 4 and 4¾ inches and cross-section dimensions of no more than 2 inches); with 1½ inches between the grab bar and the wall; and at least 1½ inches between the grab bar and any object projecting beside or below it and at least 12 inches between the grab bar and any object projecting above it. Grab bars shall also comply with requirements for surface hazards, fittings, and structural strength. Standards §§ 213.3.2, 604.5, 609.

(2) Women's

(a) The surface of the route to the women's toilet room is not stable, firm and slip resistant. To each area, feature, or element described, provide at least one accessible route that coincides with or is located in the same area as general circulation paths. The accessible route must have a minimum clear width of 36 inches (except that it may narrow to no less than 32 inches for a length of no more than 24 inches), or a minimum clear width of 42 inches if there is a U-turn around an obstruction less than 48 inches wide; have passing spaces at least every 200 feet; have a minimum clear headroom of 80 inches; have a surface that is firm, stable, and slip resistant; have, in the absence of a curb ramp, ramp, elevator, or platform lift, no level changes in excess of ½ inch vertically; have no level changes greater than ¼ inch vertically unless they are beveled with a slope no greater than 50%; and have a running slope no

greater than 5% (or have been constructed as a fully accessible ramp) and a cross slope no greater than 2.08%. Standards §§ 206, 301.1, 401.1.

(b) The toilet room sign is not mounted on the wall adjacent to the latch side of the door and does not have Braille and raised characters. Provide a toilet or locker room sign with raised and Braille characters. Tactile signs shall be mounted on the wall adjacent to the latch side of the door or the nearest adjacent wall (except that signs can be mounted on the push side of doors with closers and without hold-open devices); mounted 48 inches minimum from floor to the baseline of the lowest tactile character and 60 inches maximum from the floor to the baseline of the highest tactile character; and located so that a clear floor space of at least 18 inches by 18 inches, centered on the tactile characters, is provided beyond the arc of any door's swing between the closed and 45 degrees open positions. If not all toilet rooms are accessible, provide signage with the International Symbol of Accessibility at all accessible toilet rooms. Standards §§ 216.2, 703.

(c) The door into the toilet room has a clear opening width of 29 inches and it has knob hardware. Provide a door with a clear opening at least 32 inches wide when measured from the face of the door to the opposite stop when the door is opened 90 degrees and with hardware usable with one hand and without tight grasping, pinching, or twisting of the wrist. Lever-operated, push-type, and U-shaped handles are acceptable designs. Standards §§ 4.13.5, 4.13.9.

(d) The entrance door has a 5 inch change in level at the threshold. Provide an accessible door with a threshold that is no more than ¼ inch high, or is between ¼ inch and ½ inch high (¾ inch high if the threshold is existing or altered) and is beveled with a slope no greater than 50%. Standards §§ 206.5, 302, 303, 404.2.5.

(e) The light switch is mounted at 56 inches above the finished floor. Operable parts and controls of this element shall be between 15 and 48 inches high and accompanied by clear floor space of 30 by 48 inches that allows a forward or parallel approach by a person using a wheelchair. Standards §§ 205.1, 305, 308.2, 308.3, 309.

(f) No accessible mirror is provided. Provide at least one

mirror such that, if it is mounted above a lavatory or countertop, it is mounted with the bottom edge of the reflecting surface no more than 40 inches high; or, if it is not mounted above a lavatory or countertop, it is mounted with the bottom edge of the reflecting surface no more than 35 inches high. Standards §§ 213.2, 603.3.

(g) Insufficient turning space is provided within the toilet room. Provide an unobstructed turning space at least 60 inches in diameter or a T-shaped space complying with § 304.3.2. Standards §§ 213.2, 304.3, 603.2.1.

(h) The paper towel dispenser controls are mounted at 66 inches above the finished floor with a forward reach required. Operable parts and controls of this element shall be between 15 and 48 inches high and accompanied by clear floor space of 30 by 48 inches that allows a forward or parallel approach by a person using a wheelchair. Standards §§ 205.1, 305, 308.2, 308.3, 309.

(i) The lavatory water supply and drain pipes are not covered or otherwise configured to protect against contact, there is insufficient clear floor space, and the faucet hardware requires tight grasping, twisting, or turning of the wrist. Provide water supply and drain pipes insulated or otherwise configured to protect against contact. There shall be no sharp or abrasive surfaces underneath the lavatory or sink. Standards §§ 213.3.4, 606.5.

(j) The toilet seat is mounted 14 inches above the finished floor and the centerline is 22 inches from the side wall. Provide a toilet with the top of the seat 17 to 19 inches high. The seat shall not be sprung to return to a lifted position. Provide a toilet with its centerline between 16 and 18 inches from the near side wall. Standards §§ 213.3.2, 604.2, 604-4.

(k) The toilet flush control is on the closed side. Provide a flush control mounted on the “open” side of the toilet’s clear floor space, between 15 and 48 inches high, and requiring a maximum of 5 pounds of force to operate; or provide an automatic flush device. Standards §§ 213.3.2, 309.4, 604.6.

(l) No grab bars are provided at the toilet. Provide a rear grab bar that is at least 36 inches long (except where wall space

does not permit it due to the location of a recessed fixture, in which case the grab bar may be 24 inches long), extending 12 inches from the toilet centerline on one side and 24 inches on the other side (except where an administrative authority requires flush controls to be located in a position that conflicts with the location of the rear grab bar, in which case the bar may be split or shifted to the open side). Provide a side grab bar that is at least 42 inches in overall length, with the far end mounted at least 54 inches from the rear wall and the closer end no more than 12 inches from the rear wall. Grab bars shall be mounted between 33 and 36 inches high to the top of the gripping surface; with a diameter between 1¼ and 2 inches (or, if the grab bar is not circular, a perimeter between 4 and 4¾ inches and cross-section dimensions of no more than 2 inches); with 1½ inches between the grab bar and the wall; and at least 1½ inches between the grab bar and any object projecting beside or below it and at least 12 inches between the grab bar and any object projecting above it. Grab bars shall also comply with requirements for surface hazards, fittings, and structural strength. Standards §§ 213.3.2, 604.5, 609.

(3) The shower in men's and women's rooms are inaccessible. Provide a fully accessible transfer or roll-in type shower compartment with the following features: controls that are operable with one hand, without tight grasping, pinching, or twisting of the wrist, that require no more than 5 pounds of force to operate; a shower spray unit with an on/off control with a non-positive shutoff and a hose at least 59 inches long that can be used both as a fixed shower head and as a hand-held shower and that delivers water no hotter than 120 degrees; a curb at the shower entrance that is no higher than ½ inch and, in roll-in showers, is beveled if higher than ¼ inch; enclosures, if any, that do not obstruct controls, faucets, or spray units and do not obstruct transfers from wheelchairs onto shower seats; and grab bars that comply with § 609. If the shower is transfer type, the compartment shall be 36 inches by 36 inches, the entrance shall be at least 36 inches wide, and clearance adjacent to the opening shall be 36 inches wide by 48 inches long measured from the control wall (so that the clearance extends beyond the seat); provide grab bars across the control wall and across the back wall to a point 18 inches from the control wall; provide a rectangular or L-shaped seat complying with § 610 between 17 and 19 inches high extending from the back wall to within 3 inches of the entry; and provide controls on the wall opposite the seat above the grab bar, between 38 and 48

inches high, on the open side of the compartment. If the shower is roll-in type, the compartment shall be 30 inches minimum by 60 inches minimum, the entrance shall be a minimum of 60 inches wide (or a minimum of 36 inches wide at one end of the long side of the compartment), and clearance adjacent to the opening shall be at least 30 inches wide by 60 inches long; provide grab bars on three walls (unless a seat is provided, in which case grab bars shall be on two walls and there shall be no grab bar above the seat), 6 inches maximum from any adjacent wall; and provide controls mounted above the grab bar, no more than 48 inches high; if a seat is provided, it shall comply with § 610.3 and the controls shall be on the back wall adjacent to the seat within 27 inches of the seat wall (unless the shower opening is 36 inches long, in which case the controls can also be on the back wall opposite the seat). Standards §§ 213.3.6, 608, 609, 610.

i. Fields Landing Post Office

i. Accessible Route

(1) The surface of the route to the post office ramp is not stable, firm, and slip resistant. To each area, feature, or element described, provide at least one accessible route that coincides with or is located in the same area as general circulation paths. The accessible route must have a minimum clear width of 36 inches (except that it may narrow to no less than 32 inches for a length of no more than 24 inches), or a minimum clear width of 42 inches if there is a U-turn around an obstruction less than 48 inches wide; have passing spaces at least every 200 feet; have a minimum clear headroom of 80 inches; have a surface that is firm, stable, and slip resistant; have, in the absence of a curb ramp, ramp, elevator, or platform lift, no level changes in excess of ½ inch vertically; have no level changes greater than ¼ inch vertically unless they are beveled with a slope no greater than 50%; and have a running slope no greater than 5% (or have been constructed as a fully accessible ramp) and a cross slope no greater than 2.08%. Standards §§ 206, 301.1, 401.1.

(2) Ramp. The ramp slope is 21.1%; no edge protection is provided; the landing at the top of the ramp is 45 inches wide and the surface of the bottom landing is not stable, firm, and slip resistant; and the handrails are not accessible. Provide a ramp that is at least 36 inches wide between handrails, with a slope not exceeding 8.33% and a cross slope not exceeding 2.08%; with level landings at least as wide as the ramp and 60 inches long at the top and bottom of every ramp run; with level landings at least 60 inches by 60 inches

when the ramp changes direction; and with no changes in level other than the slope and cross-slope. The ramp shall have no run containing a rise greater than 30 inches. On each side of ramp runs and landings, provide edge protection that consists of either an extended ground surface at least 12 inches beyond the edge of the surface of the ramp or landing, or a curb or barrier that prevents the passage of a 4 inch diameter sphere where any part of the sphere is within 4 inches of the surface. On both sides of ramps with rises greater than 6 inches, provide handrails that have a diameter between 1¼ and 2 inches or a perimeter between 4 inches and 6¼ inches and a cross section of no more than 2¼ inches such that the handrails are continuous along the full length of the ramp run. Inside handrails on switchbacks or doglegs shall be continuous between runs; handrails shall have a continuous gripping surface extending at least 12 inches beyond the top and bottom of the ramp parallel with the ground surface; extensions shall return to the wall, guard, or landing surface (or continue on as handrails); handrails shall not rotate within their fittings; handrails shall be mounted at a consistent height between 34 inches and 38 inches above the ramp surface and at least 1½ inches from the wall; gripping surfaces and adjacent surfaces shall be free of sharp or abrasive elements and have rounded edges; and gripping surfaces shall not be obstructed along their tops or sides and the bottoms shall not be obstructed for more than 20% of their length and have no horizontal projections occurring closer than 1½ inches from the bottom of the gripping surface (except that the distance between horizontal projections and the bottom of the gripping surface can be reduced by ⅛ inch for each ½ inch of handrail perimeter over 4 inches). If the ramp is subject to wet conditions, landings shall be designed to prevent the accumulation of water. Standards §§ 206.2, 405, 505.

j. Arts and Crafts Building

i. Accessible Route

(1) The entrance to the building has a clear opening width of 30 inches for a single leaf. Provide a door with a clear opening at least 32 inches wide, measured between the face of the door and the opposite stop, when the door is open 90 degrees. Standards §§ 206.4, 206.5, 404.2.3.

(2) The entrance lacks the required level approach within the door's required maneuvering clearance. The floor or ground area within the door's required clearances shall have a slope no greater than 2.08%, or an automatic door opener with standby power or that remains open with the power off. All automatic door opener

operating devices shall be easy to operate with one hand; shall not require tight grasping, pinching, or twisting of the wrist to operate; shall not require more than 5 pounds of force to operate; shall be mounted between 15 and 48 inches high on an accessible route; and shall be accompanied by a clear floor space that is 48 inches by 30 inches and is beyond the arc of the door's swing. Standards §§ 206.4, 305, 308, 309.4, 404.2.4.4, 404.3.5.

ii. Telephone

(1) The highest operable part of the public telephone is 55 inches above the finished floor; there is 12 inches of knee space depth; no volume control; and no sign. Provide an accessible telephone with the clear floor space of at least 30 inches by 48 inches that allows either a forward or parallel approach such that bases, enclosures, and fixed seats do not impede approaches to the telephone. All operable parts of the telephone shall be mounted between 15 and 48 inches high; volume control shall be provided; the cord shall be at least 29 inches long from the telephone to the handset; and there shall be a picture of a telephone handset with radiating sound waves. Standards §§ 217, 305, 309, 703.7.2.3, 704.

(2) The wall mounted telephone protrudes into the main walkway and is not detectable to a blind person using a cane. Unless protected by a cane detectable barrier, objects with their leading edges between 27 inches and 80 inches high shall not protrude into circulation paths more than 4 inches for wall-mounted elements, or 12 inches for free standing post- or pylon-mounted elements. Protruding objects (and cane-detectable barriers) shall not reduce the clear width of accessible routes or maneuvering spaces below minimum requirements. Standards §§ 206, 307.

iii. Kitchen Sink. The kitchen sink faucet requires tight grasping, pinching, or twisting of the wrist. Provide a lavatory with a faucet that can be operated with no more than 5 pounds of force and can be used with one hand and without tight grasping, pinching, or twisting of the wrist (lever-operated, push-type, and electronically controlled mechanisms are examples of acceptable designs). Hand-operated metering faucets shall remain open for at least 10 seconds. Standards §§ 213.3.4, 309.4, 606.4.

iv. Ramp. The ramp has no edge protection; no level landing at the top or bottom of the ramp; and no accessible handrails. Provide a ramp that is at least 36 inches wide between handrails, with a slope not exceeding 8.33% and a cross slope not exceeding 2.08%; with level landings at least as wide as the ramp and 60 inches long at the top and bottom of every ramp run; with level landings at least 60 inches by 60 inches when the ramp changes

direction; and with no changes in level other than the slope and cross-slope. The ramp shall have no run containing a rise greater than 30 inches. On each side of ramp runs and landings, provide edge protection that consists of either an extended ground surface at least 12 inches beyond the edge of the surface of the ramp or landing, or a curb or barrier that prevents the passage of a 4 inch diameter sphere where any part of the sphere is within 4 inches of the surface. On both sides of ramps with rises greater than 6 inches, provide handrails that have a diameter between 1¼ and 2 inches or a perimeter between 4 inches and 6¼ inches and a cross section of no more than 2¼ inches such that the handrails are continuous along the full length of the ramp run. Inside handrails on switchbacks or doglegs shall be continuous between runs; handrails shall have a continuous gripping surface extending at least 12 inches beyond the top and bottom of the ramp parallel with the ground surface; extensions shall return to the wall, guard, or landing surface (or continue on as handrails); handrails shall not rotate within their fittings; handrails shall be mounted at a consistent height between 34 inches and 38 inches above the ramp surface and at least 1½ inches from the wall; gripping surfaces and adjacent surfaces shall be free of sharp or abrasive elements and have rounded edges; and gripping surfaces shall not be obstructed along their tops or sides and the bottoms shall not be obstructed for more than 20% of their length and have no horizontal projections occurring closer than 1½ inches from the bottom of the gripping surface (except that the distance between horizontal projections and the bottom of the gripping surface can be reduced by ⅛ inch for each ½ inch of handrail perimeter over 4 inches). If the ramp is subject to wet conditions, landings shall be designed to prevent the accumulation of water. Standards §§ 206.2, 405, 505.

k. Arts Building

i. Women's

(1) The toilet room sign is not mounted on the wall adjacent to the latch side of the door with Braille and raised characters. Provide a toilet room sign with raised and Braille characters. Tactile signs shall be mounted on the wall adjacent to the latch side of the door or the nearest adjacent wall (except that signs can be mounted on the push side of doors with closers and without hold-open devices); mounted 48 inches minimum from floor to the baseline of the lowest tactile character and 60 inches maximum from the floor to the baseline of the highest tactile character; and located so that a clear floor space of at least 18 inches by 18 inches, centered on the tactile characters, is provided beyond the arc of any door's swing between the closed and 45 degrees open positions. If not all toilet rooms are accessible, provide signage with the International Symbol of Accessibility at all accessible toilet rooms. Standards

§§ 216.2, 703.

(2) The door to the toilet room is 30 inches wide, has knob hardware and requires 15 pounds of pressure to open. Provide a door with a clear opening at least 32 inches wide, measured between the face of the door and the opposite stop, when the door is open 90 degrees. Provide a door with hardware, mounted between 34 and 48 inches high, that is operable with one hand and does not require tight grasping, pinching, or twisting of the wrist and requires no more than 5 pounds of force to operate. Lever-operated mechanisms, push-type mechanisms, and U-shaped handles are acceptable designs. Standards §§ 206.4, 206.5, 309.4, 404.2.3, 404.2.7.

(3) No accessible mirror is provided. Provide at least one mirror such that, if it is mounted above a lavatory or countertop, it is mounted with the bottom edge of the reflecting surface no more than 40 inches high; or, if it is not mounted above a lavatory or countertop, it is mounted with the bottom edge of the reflecting surface no more than 35 inches high. Standards §§ 213.2, 603.3.

(4) The paper towel dispenser controls are mounted at 56 inches above the finished floor over an obstruction. Operable parts and controls of this element shall be no more than 48 inches high for a forward reach, or no more than 44 inches high if over an obstruction between 20 and 25 inches deep (for a forward reach, obstructions may not be deeper than 25 inches and obstructions must allow knee space); or mounted not more than 48 inches high for a side reach, or no more than 46 inches high if over an obstruction between 10 and 24 inches deep (for a side reach, obstruction may not be deeper than 24 inches); and accompanied by clear floor space of 30 inches by 48 inches that allows a forward or parallel approach, respectively, by a person using a wheelchair. Standards §§ 205.1, 305, 308.2, 308.3.

(5) The lavatory provides no knee and toe clearance; the water supply and drain pipes are not insulated or otherwise configured to protect against contact; and the faucet hardware requires tight grasping, pinching or twisting of the wrist. Provide at least 5% of all lavatories and sinks with the top of the rim or counter 34 inches high or less; knee clearance at least 30 inches wide, between 9 inches and 27 inches high, extending between 11 and 25 inches deep at 9 inches high, and extending at least 8 inches deep at 27 inches high; and toe clearance at least 30 inches wide and 9 inches high, and extending between 17 and 25 inches deep under the lavatory; water supply and drain pipes insulated or otherwise

configured to protect against contact; no sharp or abrasive surfaces underneath; clear floor space at least 30 inches wide by 48 inches deep positioned for a forward approach (except that a parallel approach with no knee and toe clearance can be provided at a kitchen sink where there is no cook top or conventional range and at wet bars); and a faucet that can be operated with no more than 5 pounds of force and can be used with one hand and without tight grasping, pinching, or twisting of the wrist (lever-operated, push-type, and electronically controlled mechanisms are examples of acceptable designs). Hand-operated metering faucets shall remain open for at least 10 seconds. Standards §§ 213.3.4, 305, 306, 309, 606.

(6) No accessible toilet compartment is provided. Provide an accessible toilet compartment at least 60 inches wide and at least 59 inches deep (or at least 56 inches deep with a wall-mounted toilet) such that all of the compartment's elements, including door, door hardware, toilet, size and arrangement, toe clearances, grab bars, controls, and dispensers, comply with the Standards. Standards §§ 213.3.1, 301.1, 404, 604, 604.8.1, 609.

ii. Men's

(1) The toilet room sign is not mounted on the wall adjacent to the latch side of the door with Braille and raised characters. Provide a toilet sign with raised and Braille characters. Tactile signs shall be mounted on the wall adjacent to the latch side of the door or the nearest adjacent wall (except that signs can be mounted on the push side of doors with closers and without hold-open devices); mounted 48 inches minimum from floor to the baseline of the lowest tactile character and 60 inches maximum from the floor to the baseline of the highest tactile character; and located so that a clear floor space of at least 18 inches by 18 inches, centered on the tactile characters, is provided beyond the arc of any door's swing between the closed and 45 degrees open positions. If not all toilet rooms are accessible, provide signage with the International Symbol of Accessibility at all accessible toilet rooms. Standards §§ 216.2, 703.

(2) The door to the toilet room is 30 inches wide, has knob hardware, and requires 15 pounds of pressure to open. Provide a door with a clear opening at least 32 inches wide, measured between the face of the door and the opposite stop, when the door is open 90 degrees. Provide a door with hardware, mounted between 34 and 48 inches high, that is operable with one hand and does not require tight grasping, pinching, or twisting of the wrist and requires no

more than 5 pounds of force to operate. Lever-operated mechanisms, push-type mechanisms, and U-shaped handles are acceptable designs. Standards §§ 206.4, 206.5, 309.4, 404.2.3, 404.2.7.

(3) The paper towel dispenser controls are mounted at 57 inches above the finished floor over an obstruction. Operable parts and controls of this element shall be no more than 48 inches high for a forward reach, or no more than 44 inches high if over an obstruction between 20 and 25 inches deep (for a forward reach, obstructions may not be deeper than 25 inches and obstructions must allow knee space); or mounted not more than 48 inches high for a side reach, or no more than 46 inches high if over an obstruction between 10 and 24 inches deep (for a side reach, obstruction may not be deeper than 24 inches); and accompanied by clear floor space of 30 inches by 48 inches that allows a forward or parallel approach, respectively, by a person using a wheelchair. Standards §§ 205.1, 305, 308.2, 308.3.

(4) The lavatory provides no knee and toe clearance; the water supply and drain pipes are not insulated or otherwise configured to protect against contact; and the faucet hardware requires tight grasping, pinching or twisting of the wrist. Provide at least 5% of all lavatories and sinks with the top of the rim or counter 34 inches high or less; knee clearance at least 30 inches wide, between 9 inches and 27 inches high, extending between 11 and 25 inches deep at 9 inches high, and extending at least 8 inches deep at 27 inches high; and toe clearance at least 30 inches wide and 9 inches high, and extending between 17 and 25 inches deep under the lavatory; water supply and drain pipes insulated or otherwise configured to protect against contact; no sharp or abrasive surfaces underneath; clear floor space at least 30 inches wide by 48 inches deep positioned for a forward approach (except that a parallel approach with no knee and toe clearance can be provided at a kitchen sink where there is no cook top or conventional range and at wet bars); and a faucet that can be operated with no more than 5 pounds of force and can be used with one hand and without tight grasping, pinching, or twisting of the wrist (lever-operated, push-type, and electronically controlled mechanisms are examples of acceptable designs). Hand-operated metering faucets shall remain open for at least 10 seconds. Standards §§ 213.3.4, 305, 306, 309, 606.

(5) No accessible toilet compartment is provided. Provide an accessible toilet compartment at least 60 inches wide and at least 59 inches deep (or at least 56 inches deep with a wall-mounted

toilet) such that all of the compartment's elements, including door, door hardware, toilet, size and arrangement, toe clearances, grab bars, controls, and dispensers, comply with the Standards. Standards §§ 213.3.1, 301.1, 404, 604, 604.8.1, 609.

l. Poultry Barns

i. Ramp. The ramp has a slope of 14.2%; lacks the required level landing at the bottom; and no accessible handrails are provided. Provide a ramp that is at least 36 inches wide between handrails, with a slope not exceeding 8.33% and a cross slope not exceeding 2.08%; with level landings at least as wide as the ramp and 60 inches long at the top and bottom of every ramp run; with level landings at least 60 inches by 60 inches when the ramp changes direction; and with no changes in level other than the slope and cross-slope. The ramp shall have no run containing a rise greater than 30 inches. On each side of ramp runs and landings, provide edge protection that consists of either an extended ground surface at least 12 inches beyond the edge of the surface of the ramp or landing, or a curb or barrier that prevents the passage of a 4 inch diameter sphere where any part of the sphere is within 4 inches of the surface. On both sides of ramps with rises greater than 6 inches, provide handrails that have a diameter between 1¼ and 2 inches or a perimeter between 4 inches and 6¼ inches and a cross section of no more than 2¼ inches such that the handrails are continuous along the full length of the ramp run. Inside handrails on switchbacks or doglegs shall be continuous between runs; handrails shall have a continuous gripping surface extending at least 12 inches beyond the top and bottom of the ramp parallel with the ground surface; extensions shall return to the wall, guard, or landing surface (or continue on as handrails); handrails shall not rotate within their fittings; handrails shall be mounted at a consistent height between 34 inches and 38 inches above the ramp surface and at least 1½ inches from the wall; gripping surfaces and adjacent surfaces shall be free of sharp or abrasive elements and have rounded edges; and gripping surfaces shall not be obstructed along their tops or sides and the bottoms shall not be obstructed for more than 20% of their length and have no horizontal projections occurring closer than 1½ inches from the bottom of the gripping surface (except that the distance between horizontal projections and the bottom of the gripping surface can be reduced by ⅛ inch for each ½ inch of handrail perimeter over 4 inches). If the ramp is subject to wet conditions, landings shall be designed to prevent the accumulation of water. Standards §§ 206.2, 405, 505.

ii. Door. The entrance has an opening width of 29 inches. Provide a door with a clear opening at least 32 inches wide, measured between the face of the door and the opposite stop, when the door is open 90 degrees. Standards §§ 206.4, 206.5, 404.2.3.

m. Ice Cream Concessions

i. The entrance door threshold has a one inch change in level. Provide an accessible door with a threshold that is no more than ¼ inch high, or is between ¼ inch and ½ inch high (¾ inch high if the threshold is existing or altered) and is beveled with a slope no greater than 50%. Standards §§ 206.5, 302, 303, 404.2.5.

ii. The entrance door has knob hardware is used. Provide a door with hardware, mounted between 34 and 48 inches high, that is operable with one hand and does not require tight grasping, pinching, or twisting of the wrist and requires no more than 5 pounds of force to operate. Lever-operated mechanisms, push-type mechanisms, and U-shaped handles are acceptable designs. Standards §§ 206.4, 206.5, 309.4, 404.2.7.

n. Judging Barn

i. No wheelchair seating locations and companion seating are provided. Provide 6 wheelchair seating areas, each with a minimum clear ground or floor space of 33 inches wide by 48 inches deep for forward or rear access, or 33 inches wide by 60 inches deep perpendicular to the doorway for side access. The ground or floor at all wheelchair locations shall be level, firm, stable, and slip resistant; wheelchair seating areas shall be an integral part of the fixed seating plan and shall be located so as to provide people with physical disabilities a choice of admission prices and lines of sight comparable to those available for members of the general public; that wheelchair seating areas adjoin an accessible route that also serves as a means of egress in case of emergency; and that at least one fixed companion seat is provided next to each wheelchair seating area. 28 C.F.R. § 35.151(g), Standards §§ 221.2, 221.3, 221.4, 802.1, 802.2, 802.4.

ii. The entrance door threshold has a ¾ inch change in level. Provide an accessible door with a threshold that is no more than ¼ inch high, or is between ¼ inch and ½ inch high (¾ inch high if the threshold is existing or altered) and is beveled with a slope no greater than 50%. Standards §§ 206.5, 302, 303, 404.2.5.

o. Grandstand

i. Ticket Booth

(1) The route to the ticket booth contains a built up ramp to the window that has a slope of 17.9% and the level landing does not provide adequate level clear floor space at the counter. At this element, provide clear floor space that contains no changes in level within the required 30 inch by 48 inch space directly in front of the

element. Additionally, maneuvering clearances shall comply with § 305, including, if appropriate, providing additional maneuvering space at alcoves. Standards §§ 206, 305.

(2) The ticket counter is 47 inches above the finished floor. Provide counters dispersed throughout the facility (dispersion is not required where only 1 counter is provided) on accessible routes such that each counter has a portion extending the same depth as the counter top and no more than 36 inches high. If a parallel approach is provided, the accessible portion of the counter shall be at least 36 inches long (unless the entire counter is less than 36 inches high) and have clear floor space positioned for a parallel approach; if a forward approach is provided, the accessible portion of the counter shall be at least 30 inches long and have knee and toe space provided under the counter and clear floor space positioned for a forward approach. Standards §§ 227.3, 305, 306, 904.4.

ii. Stadium Seating

(1) There is no accessible route to the grand stand. To each area, feature, or element described, provide at least one accessible route that coincides with or is located in the same area as general circulation paths. The accessible route must have a minimum clear width of 36 inches (except that it may narrow to no less than 32 inches for a length of no more than 24 inches), or a minimum clear width of 42 inches if there is a U-turn around an obstruction less than 48 inches wide; have passing spaces at least every 200 feet; have a minimum clear headroom of 80 inches; have a surface that is firm, stable, and slip resistant; have, in the absence of a curb ramp, ramp, elevator, or platform lift, no level changes in excess of ½ inch vertically; have no level changes greater than ¼ inch vertically unless they are beveled with a slope no greater than 50%; and have a running slope no greater than 5% (or have been constructed as a fully accessible ramp) and a cross slope no greater than 2.08%. Standards §§ 206, 301.1, 401.1.

(2) The grandstand provides no seating areas for wheelchair users and no companion seating. Provide the number of wheelchair spaces shown in the following chart. Where provided, each luxury box, club box, and suite shall contain wheelchair spaces in accordance with the following chart; and at least 20% of all other boxes shall also contain wheelchair spaces in accordance with the following chart. Standards § 221.2.

Dimensions. Each wheelchair space shall have minimum clear

ground or floor space of 36 inches wide by 48 inches deep when approachable from the front or rear, or 36 inches wide by 60 inches deep when approachable only from the side (spaces need only be 33 inches wide if adjacent to another wheelchair space). The ground or floor at all wheelchair spaces shall be level, firm, stable and slip resistant; wheelchair spaces shall not overlap circulation paths; and at least one companion seat shall be provided next to each wheelchair space. Ensure that wheelchair spaces and companion seats are not located on (or obstructed by) temporary platforms or other movable structures. 28 C.F.R. § 35.151(g); Standards §§ 221.2, 221.3, 802.1.

Integration / Lines of Sight. Wheelchair spaces shall be an integral part of the seating plan and shall provide spectators with choices of seating locations and viewing angles that are substantially equivalent to, or better than, the choices of seating locations and viewing angles available to all other spectators. In stadiums where spectators can be expected to stand during the show or event (for example, football, baseball, basketball games, or rock concerts), the wheelchair spaces shall provide lines of sight over standing spectators. Standards §§ 221.2, 802.2.

Dispersion. When the seating capacity exceeds 300, wheelchair spaces and companion seats shall be horizontally and vertically dispersed. Ensure that wheelchair spaces and companion seats are dispersed to all levels that include seating served by an accessible route. Wheelchair spaces and companion seats shall be dispersed vertically at varying distances from the screen, performance area, or playing field, including locations in each balcony or mezzanine located on an accessible route. Assembly areas that (1) have seating encircling, in whole or in part, a field of play or performance area, and (2) are required to horizontally disperse wheelchair spaces and companion seats, shall disperse wheelchair spaces and companion seats around that field of play or performance area. 28 C.F.R. § 35.151(g), Standards § 221.2.3.

Companion Seats. In row seating, companion seats shall be located to provide shoulder alignment with adjacent wheelchair spaces. The shoulder alignment point of the wheelchair space shall be measured 36 inches from the front of the wheelchair space. The floor surface of the companion seat shall be the same elevation as the floor surface of the wheelchair space. Companion seats shall be equivalent in size, quality, comfort, and amenities to the seating in the immediate area. Companion seats may be fixed or movable. Standards § 221.3.

Aisle Seats. At least 5% of the total number of aisle seats shall provide folding or retractable armrests on the aisle side of the seat, shall be identified by a sign or marker, and shall be the aisle seats closest to accessible routes. Standards §§ 221.4, 802.4.

Seating Capacity of Assembly Area	Number of Required Wheelchair Spaces
4 to 25	1
26 to 50	2
51 to 150	4
151 to 300	5
301 to 500	6
501 to 5000	6, plus 1 for each 150 between 501 through 5000
5001 and over	36, plus 1 for each 200 over 5000

iii. Toilet Rooms

(1) The surface of the route from designated accessible seating area to the toilet rooms is not stable, firm, and slip resistant. To each area, feature, or element described, provide at least one accessible route that coincides with or is located in the same area as general circulation paths. The accessible route must have a minimum clear width of 36 inches (except that it may narrow to no less than 32 inches for a length of no more than 24 inches), or a minimum clear width of 42 inches if there is a U-turn around an obstruction less than 48 inches wide; have passing spaces at least every 200 feet; have a minimum clear headroom of 80 inches; have a surface that is firm, stable, and slip resistant; have, in the absence of a curb ramp, ramp, elevator, or platform lift, no level changes in excess of ½ inch vertically; have no level changes greater than ¼ inch vertically unless they are beveled with a slope no greater than 50%; and have a running slope no greater than 5% (or have been constructed as a fully accessible ramp) and a cross slope no greater than 2.08%. Standards §§ 206, 301.1, 401.1.

(2) Women's

(a) The toilet room sign is not mounted on the wall adjacent to the latch side of the door with Braille and raised characters.

Provide a toilet or locker room sign with raised and Braille characters. Tactile signs shall be mounted on the wall adjacent to the latch side of the door or the nearest adjacent wall (except that signs can be mounted on the push side of doors with closers and without hold-open devices); mounted 48 inches minimum from floor to the baseline of the lowest tactile character and 60 inches maximum from the floor to the baseline of the highest tactile character; and located so that a clear floor space of at least 18 inches by 18 inches, centered on the tactile characters, is provided beyond the arc of any door's swing between the closed and 45 degrees open positions. If not all toilet rooms are accessible, provide signage with the International Symbol of Accessibility at all accessible toilet rooms. Standards §§ 216.2, 703.

(b) The door into the toilet room has a clear opening width of 29 inches and the door has knob hardware. Provide a door with a clear opening at least 32 inches wide, measured between the face of the door and the opposite stop, when the door is open 90 degrees. Provide a door with hardware, mounted between 34 and 48 inches high, that is operable with one hand and does not require tight grasping, pinching, or twisting of the wrist and requires no more than 5 pounds of force to operate. Lever-operated mechanisms, push-type mechanisms, and U-shaped handles are acceptable designs. Standards §§ 206.4, 206.5, 309.4, 404.2.3, 404.2.7.

(c) The door to the toilet room, which is accessed through a front approach, provides insufficient clear floor space on the latch side, in the pull direction of the door. On the pull side of the door, provide maneuvering clearance at least 60 inches deep perpendicular to the doorway and at least 18 inches (24 inches is preferred) of maneuvering clearance on the latch side of the door. Standards §§ 206.5, 404.2.4.1.

(d) No level landing is provided within the door's required maneuvering clearance. The floor or ground area within the door's required clearances shall have a slope no greater than 2.08%, or an automatic door opener with standby power or that remains open with the power off. All automatic door opener operating devices shall be easy to operate with one hand; shall not require tight grasping, pinching, or twisting of the wrist to operate; shall not require more than 5 pounds of force to operate; shall be

mounted between 15 and 48 inches high on an accessible route; and shall be accompanied by a clear floor space that is 48 inches by 30 inches and is beyond the arc of the door's swing. Standards §§ 206.4, 305, 308, 309.4, 404.2.4.4, 404.3.5.

(e) No accessible mirror is provided. Provide at least one mirror such that, if it is mounted above a lavatory or countertop, it is mounted with the bottom edge of the reflecting surface no more than 40 inches high; or, if it is not mounted above a lavatory or countertop, it is mounted with the bottom edge of the reflecting surface no more than 35 inches high. Standards §§ 213.2, 603.3.

(f) The wall-mounted hand dryer protrudes into the main walkway and is not detectable to a blind person using a cane. Unless protected by a cane detectable barrier, objects with their leading edges between 27 inches and 80 inches high shall not protrude into circulation paths more than 4 inches for wall-mounted elements, or 12 inches for free standing post- or pylon-mounted elements. Protruding objects (and cane-detectable barriers) shall not reduce the clear width of accessible routes or maneuvering spaces below minimum requirements. Standards §§ 206, 307.

(g) The lavatory faucet hardware requires tight grasping, pinching, or twisting of the wrist. Provide a lavatory with a faucet that can be operated with no more than 5 pounds of force and can be used with one hand and without tight grasping, pinching, or twisting of the wrist (lever-operated, push-type, and electronically controlled mechanisms are examples of acceptable designs). Hand-operated metering faucets shall remain open for at least 10 seconds. Standards §§ 213.3.4, 309.4, 606.4.

(h) No compliant ambulatory accessible toilet compartment is provided. Provide at least one ambulatory accessible compartment that is at least 60 inches deep and between 35 and 37 inches wide with a self-closing door that does not swing into the minimum 60 inch depth; with parallel side grab bars complying with § 604.5.1 and § 609; with the centerline of the toilet between 17 and 19 inches from either side wall or partition; with a door pull on each side of the door near the latch. If the approach is to the latch side of the exterior of the compartment door, clearance between the door opening and any obstruction shall be at least 42

inches. Standards §§ 213.3.1, 604.2, 604.8.2.

(i) No standard accessible toilet compartment is provided. Provide an accessible toilet compartment at least 60 inches wide and at least 59 inches deep (or at least 56 inches deep with a wall-mounted toilet) such that all of the compartment's elements, including door, door hardware, toilet, size and arrangement, toe clearances, grab bars, controls, and dispensers, comply with the Standards. Standards §§ 213.3.1, 301.1, 404, 604, 604.8.1, 609.

(3) Men's

(a) The toilet room sign is not mounted on the wall adjacent to the latch side of the door with Braille and raised characters. Provide a toilet room sign with raised and Braille characters. Tactile signs shall be mounted on the wall adjacent to the latch side of the door or the nearest adjacent wall (except that signs can be mounted on the push side of doors with closers and without hold-open devices); mounted 48 inches minimum from floor to the baseline of the lowest tactile character and 60 inches maximum from the floor to the baseline of the highest tactile character; and located so that a clear floor space of at least 18 inches by 18 inches, centered on the tactile characters, is provided beyond the arc of any door's swing between the closed and 45 degrees open positions. If not all toilet rooms are accessible, provide signage with the International Symbol of Accessibility at all accessible toilet rooms. Standards §§ 216.2, 703.

(b) A handrail next to the toilet room entrance protrudes into the walkway and is not detectable to a blind person using a cane. Unless protected by a cane detectable barrier, objects with their leading edges between 27 inches and 80 inches high shall not protrude into circulation paths more than 4 inches for wall-mounted elements, or 12 inches for free standing post- or pylon-mounted elements. Protruding objects (and cane-detectable barriers) shall not reduce the clear width of accessible routes or maneuvering spaces below minimum requirements. Standards §§ 206, 307.

(c) The inner door has an opening width of 30 inches. Provide a door with a clear opening at least 32 inches wide, measured between the face of the door and the opposite stop, when the door is open 90 degrees. Standards §§

206.4, 206.5, 404.2.3.

(d) No level landing is provided within the door's required maneuvering clearance. The floor or ground area within the door's required clearances shall have a slope no greater than 2.08%, or an automatic door opener with standby power or that remains open with the power off. All automatic door opener operating devices shall be easy to operate with one hand; shall not require tight grasping, pinching, or twisting of the wrist to operate; shall not require more than 5 pounds of force to operate; shall be mounted between 15 and 48 inches high on an accessible route; and shall be accompanied by a clear floor space that is 48 inches by 30 inches and is beyond the arc of the door's swing. Standards §§ 206.4, 305, 308, 309.4, 404.2.4.4, 404.3.5.

(e) No accessible mirror is provided. Provide at least one mirror such that, if it is mounted above a lavatory or countertop, it is mounted with the bottom edge of the reflecting surface no more than 40 inches high; or, if it is not mounted above a lavatory or countertop, it is mounted with the bottom edge of the reflecting surface no more than 35 inches high. Standards §§ 213.2, 603.3.

(f) The lavatory faucet hardware requires tight grasping, pinching, or twisting of the wrist. Provide a lavatory with a faucet that can be operated with no more than 5 pounds of force and can be used with one hand and without tight grasping, pinching, or twisting of the wrist (lever-operated, push-type, and electronically controlled mechanisms are examples of acceptable designs). Hand-operated metering faucets shall remain open for at least 10 seconds. Standards §§ 213.3.4, 309.4, 606.4.

(g) The paper towel dispenser protrudes into the walkway and is not detectable to a blind person using a cane. Unless protected by a cane detectable barrier, objects with their leading edges between 27 inches and 80 inches high shall not protrude into circulation paths more than 4 inches for wall-mounted elements, or 12 inches for free standing post- or pylon-mounted elements. Protruding objects (and cane-detectable barriers) shall not reduce the clear width of accessible routes or maneuvering spaces below minimum requirements. Standards §§ 206, 307.

(h) The urinal is inaccessible because the rim is mounted 24 inches above the finished floor and does not have an elongated rim. Provide a stall-type or a wall-hung urinal with a rim mounted 17 inches high or less; a depth of at least 13½ inches from the outer face to the rear of the urinal; a clear floor space at least 30 inches wide and 48 inches deep positioned for a forward approach; and a flush control between 15 and 48 inches high or an automatic flush. Standards §§ 213.3.3, 305, 308.2, 309.4, 605.

(i) No accessible toilet compartment is provided. Provide an accessible toilet compartment at least 60 inches wide and at least 59 inches deep (or at least 56 inches deep with a wall-mounted toilet) such that all of the compartment's elements, including door, door hardware, toilet, size and arrangement, toe clearances, grab bars, controls, and dispensers, comply with the Standards. Standards §§ 213.3.1, 301.1, 404, 604, 604.8.1, 609.

21. Within 15 months of entry of this Consent Decree, the County will complete the following modifications to **Luffenholtz Park** located at 1720 Scenic Drive in Trinidad.

a. Accessible Route

i. Toilet rooms. The surface of the route from the parking area to each of the toilet rooms is not stable, firm, and slip resistant. To each area, feature, or element described, provide at least one accessible route that coincides with or is located in the same area as general circulation paths. The accessible route must have a minimum clear width of 36 inches (except that it may narrow to no less than 32 inches for a length of no more than 24 inches), or a minimum clear width of 42 inches if there is a U-turn around an obstruction less than 48 inches wide; have passing spaces at least every 200 feet; have a minimum clear headroom of 80 inches; have a surface that is firm, stable, and slip resistant; have, in the absence of a curb ramp, ramp, elevator, or platform lift, no level changes in excess of ½ inch vertically; have no level changes greater than ¼ inch vertically unless they are beveled with a slope no greater than 50%; and have a running slope no greater than 5% (or have been constructed as a fully accessible ramp) and a cross slope no greater than 2.08%. Standards §§ 206, 301.1, 401.1.

ii. No accessible route is provided to the overlook. To each area, feature, or element described, provide at least one accessible route that coincides with or is located in the same area as general circulation paths. The accessible route must have a minimum clear width of 36 inches (except that it may narrow to no less than 32 inches for a length of no more than 24 inches), or a minimum clear width of 42 inches if there is a U-turn around an

obstruction less than 48 inches wide; have passing spaces at least every 200 feet; have a minimum clear headroom of 80 inches; have a surface that is firm, stable, and slip resistant; have, in the absence of a curb ramp, ramp, elevator, or platform lift, no level changes in excess of ½ inch vertically; have no level changes greater than ¼ inch vertically unless they are beveled with a slope no greater than 50%; and have a running slope no greater than 5% (or have been constructed as a fully accessible ramp) and a cross slope no greater than 2.08%. Standards §§ 206, 301.1, 401.1.

b. Toilet Rooms

i. Women's

(1) The toilet room sign is not mounted on the wall adjacent to the latch side of the door with Braille and raised characters. Provide a toilet or locker room sign with raised and Braille characters. Tactile signs shall be mounted on the wall adjacent to the latch side of the door or the nearest adjacent wall (except that signs can be mounted on the push side of doors with closers and without hold-open devices); mounted 48 inches minimum from floor to the baseline of the lowest tactile character and 60 inches maximum from the floor to the baseline of the highest tactile character; and located so that a clear floor space of at least 18 inches by 18 inches, centered on the tactile characters, is provided beyond the arc of any door's swing between the closed and 45 degrees open positions. If not all toilet rooms are accessible, provide signage with the International Symbol of Accessibility at all accessible toilet rooms. Standards §§ 216.2, 703.

(2) The entry door threshold has a 4 inch change in level. Provide an accessible door with a threshold that is no more than ¼ inch high, or is between ¼ inch and ½ inch high (¾ inch high if the threshold is existing or altered) and is beveled with a slope no greater than 50%. Standards §§ 206.5, 302, 303, 404.2.5.

(3) The door to the toilet room, which is accessed through a front approach, has 8 inches of clear floor space on the latch side, pull side of the door. On the pull side of the door, provide maneuvering clearance at least 60 inches deep perpendicular to the doorway and at least 18 inches (24 inches is preferred) of maneuvering clearance on the latch side of the door. Standards §§ 206.5, 404.2.4.1.

(4) The door to the toilet, which is accessed through a front approach and which has both a closer and a latch, has 4 inches of clear floor space on the latch side, push side of the door. On the push side of

the door, provide maneuvering clearance at least 48 inches deep perpendicular to the doorway and at least 12 inches of maneuvering clearance on the latch side of the door, or remove the closer or the latch. Standards §§ 206.5, 404.2.4.1.

(5) Insufficient clear floor space is provided around the toilet, the toilet seat is 15 inches above the finished floor, and centerline is 21 inches from the side wall. Provide clearance at the toilet that is at least 60 inches wide and 56 inches deep. This clearance may overlap with the toilet, grab bars, dispensers, sanitary napkin disposal, coat hooks, shelves, accessible routes, clear floor space and clearances for other fixtures, and turning space; but no other fixtures or obstructions, including lavatories, may be located within this clearance. Provide a toilet with the top of the seat 17 to 19 inches high. The seat shall not be sprung to return to a lifted position. Provide a toilet with its centerline between 16 and 18 inches from the near side wall. Standards §§ 213.3.2, 604.2, 604.3, 604.4.

(6) The side grab bar at the toilet is 36 inches long and the end farthest from the rear wall is mounted 40 inches from the rear wall. Provide a side grab bar that is at least 42 inches in overall length, with the far end mounted at least 54 inches from the rear wall, and with the closer end no more than 12 inches from the rear wall. Standards §§ 213.3.2, 604.5.1.

(7) The rear grab bar at the toilet is 24 inches long. Provide a rear grab bar that is at least 36 inches long (except where wall space does not permit it due to the location of a recessed fixture, in which case the grab bar may be 24 inches long and centered on the toilet), extending 12 inches from the toilet centerline on one side and 24 inches from the toilet centerline on the other side (except where an administrative authority requires flush controls to be located in a position that conflicts with the location of the rear grab bar, in which case the bar may be split or shifted to the open side). Standards §§ 213.3.2, 604.5.2.

ii. Men's

(1) The toilet room sign is not mounted on the wall adjacent to the latch side of the door with Braille and raised characters. Provide a toilet or locker room sign with raised and Braille characters. Tactile signs shall be mounted on the wall adjacent to the latch side of the door or the nearest adjacent wall (except that signs can be mounted on the push side of doors with closers and without hold-open devices); mounted 48 inches minimum from floor to the

baseline of the lowest tactile character and 60 inches maximum from the floor to the baseline of the highest tactile character; and located so that a clear floor space of at least 18 inches by 18 inches, centered on the tactile characters, is provided beyond the arc of any door's swing between the closed and 45 degrees open positions. If not all toilet rooms are accessible, provide signage with the International Symbol of Accessibility at all accessible toilet rooms. Standards §§ 216.2, 703.

(2) The entry door threshold has a 4 inch change in level. Provide an accessible door with a threshold that is no more than ¼ inch high, or is between ¼ inch and ½ inch high (¾ inch high if the threshold is existing or altered) and is beveled with a slope no greater than 50%. Standards §§ 206.5, 302, 303, 404.2.5.

(3) The door has knob hardware. Provide a door with hardware, mounted between 34 and 48 inches high, that is operable with one hand and does not require tight grasping, pinching, or twisting of the wrist and requires no more than 5 pounds of force to operate. Lever-operated mechanisms, push-type mechanisms, and U-shaped handles are acceptable designs. Standards §§ 206.4, 206.5, 309.4, 404.2.7.

(4) The door to the toilet room, which is accessed through a front approach, has 8 inches of clear floor space on the latch side, pull side of the door. On the pull side of the door, provide maneuvering clearance at least 60 inches deep perpendicular to the doorway and at least 18 inches (24 inches is preferred) of maneuvering clearance on the latch side of the door. Standards §§ 206.5, 404.2.4.1.

(5) The door to the toilet, which is accessed through a front approach and which has both a closer and a latch, has 4 inches of clear floor space on the latch side, push side of the door. On the push side of the door, provide maneuvering clearance at least 48 inches deep perpendicular to the doorway and at least 12 inches of maneuvering clearance on the latch side of the door, or remove the closer or the latch. Standards §§ 206.5, 404.2.4.1.

(6) Insufficient clear floor space is provided around the toilet, the toilet seat is 16 inches above the finished floor, and centerline is 21 inches from the side wall. Provide clearance at the toilet that is at least 60 inches wide and 56 inches deep. This clearance may overlap with the toilet, grab bars, dispensers, sanitary napkin disposal, coat hooks, shelves, accessible routes, clear floor space and clearances for other fixtures, and turning space; but no other

fixtures or obstructions, including lavatories, may be located within this clearance. Provide a toilet with the top of the seat 17 to 19 inches high. The seat shall not be sprung to return to a lifted position. Provide a toilet with its centerline between 16 and 18 inches from the near side wall. Standards §§ 213.3.2, 604.2, 604.3, 604.4.

(7) The side grab bar at the toilet is 36 inches long and the end farthest from the rear wall is mounted 40 inches from the rear wall. Provide a side grab bar that is at least 42 inches in overall length, with the far end mounted at least 54 inches from the rear wall, and with the closer end no more than 12 inches from the rear wall. Standards §§ 213.3.2, 604.5.1.

(8) The rear grab bar at the toilet is 24 inches long. Provide a rear grab bar that is at least 36 inches long (except where wall space does not permit it due to the location of a recessed fixture, in which case the grab bar may be 24 inches long and centered on the toilet), extending 12 inches from the toilet centerline on one side and 24 inches from the toilet centerline on the other side (except where an administrative authority requires flush controls to be located in a position that conflicts with the location of the rear grab bar, in which case the bar may be split or shifted to the open side). Standards §§ 213.3.2, 604.5.2.

22. Within 9 months of entry of this Consent Decree, the County will complete the following modifications to the **Public Health Office** located at 77 Walnut Way in Willow Creek.

a. Office

i. The entry door has knob hardware. Provide a door with hardware, mounted between 34 and 48 inches high, that is operable with one hand and does not require tight grasping, pinching, or twisting of the wrist and requires no more than 5 pounds of force to operate. Lever-operated mechanisms, push-type mechanisms, and U-shaped handles are acceptable designs. Standards §§ 206.4, 206.5, 309.4, 404.2.7.

ii. The entrance door, which is accessed through a front approach and which has both a closer and a latch, lacks sufficient clear floor space on the latch side, push side of the door. On the push side of the door, provide maneuvering clearance at least 48 inches deep perpendicular to the doorway and at least 12 inches of maneuvering clearance on the latch side of the door, or remove the closer or the latch. Standards §§ 206.5, 404.2.4.1.

iii. The entry door threshold has a 1½ inch change in level. Provide an

accessible door with a threshold that is no more than ¼ inch high, or is between ¼ inch and ½ inch high (¾ inch high if the threshold is existing or altered) and is beveled with a slope no greater than 50%. Standards §§ 206.5, 302, 303, 404.2.5.

b. Single user toilet room. The toilet room contains a number of inaccessible elements and is not accessible to people with disabilities. Provide an accessible toilet room such that all of the room's elements, including signage, door, door hardware, clear floor space, toilet, stall size and arrangement (if any), urinal (if provided), grab bars, lavatory, mirror, controls, and dispensers, comply with the Standards. Standards §§ 204, 205, 206, 213, 216, 225, 301.1, 401.1, 601.1, 703, 811.

23. Within 15 months of entry of this Consent Decree, the County will complete the following modifications to **Veterans Hall** located at 1100 Main Street in Ferndale.

a. The entrance threshold has a 3 inch change in level. Provide an accessible door with a threshold that is no more than ¼ inch high, or is between ¼ inch and ½ inch high (¾ inch high if the threshold is existing or altered) and is beveled with a slope no greater than 50%. Standards §§ 206.5, 302, 303, 404.2.5.

b. The entrance door has knob hardware. Provide a door with hardware, mounted between 34 and 48 inches high, that is operable with one hand and does not require tight grasping, pinching, or twisting of the wrist and requires no more than 5 pounds of force to operate. Lever-operated mechanisms, push-type mechanisms, and U-shaped handles are acceptable designs. Standards §§ 206.4, 206.5, 309.4, 404.2.7.

c. Ramp. The handrail on the second leg of the ramp does not extend the from the mid-level of the ramp to the top landing. On both sides of the ramp, provide handrails that have a diameter between 1¼ and 2 inches or a perimeter between 4 inches and 6¼ inches and a cross section of no more than 2¼ inches such that the handrails are continuous along the full length of the ramp run. Inside handrails on switchbacks or doglegs shall be continuous between runs; handrails shall have a continuous gripping surface extending at least 12 inches beyond the top and bottom of the ramp parallel with the ground surface (except in alterations where extensions would be hazardous due to plan configuration); extensions shall return to the wall, guard, or landing surface (or continue on as handrails); handrails shall not rotate within their fittings; handrails shall be mounted at a consistent height between 34 inches and 38 inches above the ramp surface and at least 1½ inches from the wall; gripping surfaces and adjacent surfaces shall be free of sharp or abrasive elements and have rounded edges; and gripping surfaces shall not be obstructed along their tops or sides and the bottoms shall not be obstructed for more than 20% of their length and have no horizontal projections occurring closer than 1½ inches from the bottom of the gripping surface (except that the distance between horizontal projections and the bottom of the gripping surface can be

reduced by ⅛ inch for each ½ inch of handrail perimeter over 4 inches). Standards §§ 206.2, 405.8, 505.

d. Toilet Rooms

i. Women's

(1) The toilet room sign is not mounted on the wall adjacent to the latch side of the door with Braille and raised characters. Provide a toilet room sign with raised and Braille characters. Tactile signs shall be mounted on the wall adjacent to the latch side of the door or the nearest adjacent wall (except that signs can be mounted on the push side of doors with closers and without hold-open devices); mounted 48 inches minimum from floor to the baseline of the lowest tactile character and 60 inches maximum from the floor to the baseline of the highest tactile character; and located so that a clear floor space of at least 18 inches by 18 inches, centered on the tactile characters, is provided beyond the arc of any door's swing between the closed and 45 degrees open positions. If not all toilet rooms are accessible, provide signage with the International Symbol of Accessibility at all accessible toilet rooms. Standards §§ 216.2, 703.

(2) The interior door to the toilet room has a clear opening width of 29 inches. Provide a door with a clear opening at least 32 inches wide, measured between the face of the door and the opposite stop, when the door is open 90 degrees. Standards §§ 206.4, 206.5, 404.2.3.

(3) The pressure required to open the toilet room doors is 15 pounds each. Provide a door that requires no more than 5 pounds of force to open (not including the initial force needed to overcome inertia, retracting bolts, etc.). Standards §§ 206.5, 404.2.9.

(4) No accessible mirror is provided. Provide at least one mirror such that, if it is mounted above a lavatory or countertop, it is mounted with the bottom edge of the reflecting surface no more than 40 inches high; or, if it is not mounted above a lavatory or countertop, it is mounted with the bottom edge of the reflecting surface no more than 35 inches high. Standards §§ 213.2, 603.3.

(5) Insufficient turning space is provided within the toilet room. Provide an unobstructed turning space at least 60 inches in diameter or a T-shaped space complying with § 304.3.2. Standards §§ 213.2, 304.3, 603.2.1.

(6) The lavatory water supply and drain pipes are not insulated or otherwise configured to protect against contact. Provide water supply and drain pipes insulated or otherwise configured to protect against contact. There shall be no sharp or abrasive surfaces underneath the lavatory or sink. Standards §§ 213.3.4, 606.5.

(7) No accessible toilet compartment is provided. Provide an accessible toilet compartment at least 60 inches wide and at least 59 inches deep (or at least 56 inches deep with a wall-mounted toilet) such that all of the compartment's elements, including door, door hardware, toilet, size and arrangement, toe clearances, grab bars, controls, and dispensers, comply with the Standards. Standards §§ 213.3.1, 301.1, 404, 604, 604.8.1, 609.

ii. Men's

(1) The toilet room sign is not mounted on the wall adjacent to the latch side of the door with Braille and raised characters. Provide a toilet or locker room sign with raised and Braille characters. Tactile signs shall be mounted on the wall adjacent to the latch side of the door or the nearest adjacent wall (except that signs can be mounted on the push side of doors with closers and without hold-open devices); mounted 48 inches minimum from floor to the baseline of the lowest tactile character and 60 inches maximum from the floor to the baseline of the highest tactile character; and located so that a clear floor space of at least 18 inches by 18 inches, centered on the tactile characters, is provided beyond the arc of any door's swing between the closed and 45 degrees open positions. If not all toilet rooms are accessible, provide signage with the International Symbol of Accessibility at all accessible toilet rooms. Standards §§ 216.2, 703.

(2) The outer and interior doors to the toilet room have an opening width of 29 inches. Provide a door with a clear opening at least 32 inches wide, measured between the face of the door and the opposite stop, when the door is open 90 degrees. Standards §§ 206.4, 206.5, 404.2.3.

(3) The door, which is accessed through a front approach, has 5 inches of clear floor space on the latch side, pull side of the door. On the pull side of the door, provide maneuvering clearance at least 60 inches deep perpendicular to the doorway and at least 18 inches (24 inches is preferred) of maneuvering clearance on the latch side of the door. Standards §§ 206.5, 404.2.4.1.

(4) No accessible mirror is provided. Provide at least one mirror such

that, if it is mounted above a lavatory or countertop, it is mounted with the bottom edge of the reflecting surface no more than 40 inches high; or, if it is not mounted above a lavatory or countertop, it is mounted with the bottom edge of the reflecting surface no more than 35 inches high. Standards §§ 213.2, 603.3.

(5) The lavatory water supply and drain pipes are not insulated or otherwise configured to protect against contact. Provide water supply and drain pipes insulated or otherwise configured to protect against contact. There shall be no sharp or abrasive surfaces underneath the lavatory or sink. Standards §§ 213.3.4, 606.5.

(6) The urinal is inaccessible because the rim is mounted 25 inches above the finished floor and the flush control is 53 inches above the finished floor. Provide a stall-type or a wall-hung urinal with a rim mounted 17 inches high or less; a depth of at least 13½ inches from the outer face to the rear of the urinal; a clear floor space at least 30 inches wide and 48 inches deep positioned for a forward approach; and a flush control between 15 and 48 inches high or an automatic flush. Standards §§ 213.3.3, 305, 308.2, 309.4, 605.

(7) No accessible toilet compartment is provided. Provide an accessible toilet compartment at least 60 inches wide and at least 59 inches deep (or at least 56 inches deep with a wall-mounted toilet) such that all of the compartment's elements, including door, door hardware, toilet, size and arrangement, toe clearances, grab bars, controls, and dispensers, comply with the Standards. Standards §§ 213.3.1, 301.1, 404, 604, 604.8.1, 609.

24. Within 27 months of entry of this Consent Decree, the County will complete the following modifications to the **Fortuna Public Library** located at 753 14th Street in Fortuna.

a. The highest part of the magazine display is 76 inches above the finished floor. Operable parts and controls of this element shall be operable with no more than 5 pounds of force with one hand and without tight grasping, pinching, or twisting of the wrist (lever-operated, push-type, and electronically controlled mechanisms are examples of acceptable designs). The controls shall be between 15 and 48 inches high and accompanied by clear floor space of 30 by 48 inches that allows a forward or parallel approach by a person using a wheelchair. Standards §§ 205.1, 305, 308, 309.4.

b. The wall-mounted drinking fountain protrudes into the main walkway and is not detectable to a blind person using a cane. Unless protected by a cane detectable barrier, objects with their leading edges between 27 inches and 80 inches high shall not protrude into circulation paths more than 4 inches for wall-mounted

elements, or 12 inches for free standing post- or pylon-mounted elements. Protruding objects (and cane-detectable barriers) shall not reduce the clear width of accessible routes or maneuvering spaces below minimum requirements. Standards §§ 206, 307.

c. Toilet Rooms

i. Men's

(1) The toilet room sign is not mounted on the wall adjacent to the latch side of the door. Provide a toilet or locker room sign with raised and Braille characters. Tactile signs shall be mounted on the wall adjacent to the latch side of the door or the nearest adjacent wall (except that signs can be mounted on the push side of doors with closers and without hold-open devices); mounted 48 inches minimum from floor to the baseline of the lowest tactile character and 60 inches maximum from the floor to the baseline of the highest tactile character; and located so that a clear floor space of at least 18 inches by 18 inches, centered on the tactile characters, is provided beyond the arc of any door's swing between the closed and 45 degrees open positions. If not all toilet rooms are accessible, provide signage with the International Symbol of Accessibility at all accessible toilet rooms. Standards §§ 216.2, 703.

(2) The toilet seat cover dispenser controls are mounted at 54 inches above the finished floor over an obstruction. Operable parts and controls of this element shall be no more than 48 inches high for a forward reach, or no more than 44 inches high if over an obstruction between 20 and 25 inches deep (for a forward reach, obstructions may not be deeper than 25 inches and obstructions must allow knee space); or mounted not more than 48 inches high for a side reach, or no more than 46 inches high if over an obstruction between 10 and 24 inches deep (for a side reach, obstruction may not be deeper than 24 inches); and accompanied by clear floor space of 30 inches by 48 inches that allows a forward or parallel approach, respectively, by a person using a wheelchair. Standards §§ 205.1, 305, 308.2, 308.3.

(3) The top of the lavatory is 36 inches above the finished floor and the water supply and drain pipes are not insulated or otherwise configured to protect against contact. Provide at least 5% of all lavatories and sinks with the top of the rim or counter 34 inches high or less; knee clearance at least 30 inches wide, between 9 inches and 27 inches high, extending between 11 and 25 inches deep at 9 inches high, and extending at least 8 inches deep at 27

inches high; and toe clearance at least 30 inches wide and 9 inches high, and extending between 17 and 25 inches deep under the lavatory; water supply and drain pipes insulated or otherwise configured to protect against contact; no sharp or abrasive surfaces underneath; clear floor space at least 30 inches wide by 48 inches deep positioned for a forward approach (except that a parallel approach with no knee and toe clearance can be provided at a kitchen sink where there is no cook top or conventional range and at wet bars); and a faucet that can be operated with no more than 5 pounds of force and can be used with one hand and without tight grasping, pinching, or twisting of the wrist (lever-operated, push-type, and electronically controlled mechanisms are examples of acceptable designs). Hand-operated metering faucets shall remain open for at least 10 seconds. Standards §§ 213.3.4, 305, 306, 309, 606.

(4) The toilet centerline is 20 inches from the side wall. Provide a toilet with its centerline between 16 and 18 inches from the near side wall. Standards §§ 213.3.2, 604.2.

(5) The rear grab bar at the toilet is obstructed by the toilet tank. Provide grab bars that have at least 1½ inches between the grab bar and any object projecting beside or below it and at least 12 inches between the grab bar and any object projecting above it. Standards §§ 213.3.2, 604.5, 609.3.

ii. Women's

(1) The toilet room sign is not mounted on the wall adjacent to the latch side of the door. Provide a toilet or locker room sign with raised and Braille characters. Tactile signs shall be mounted on the wall adjacent to the latch side of the door or the nearest adjacent wall (except that signs can be mounted on the push side of doors with closers and without hold-open devices); mounted 48 inches minimum from floor to the baseline of the lowest tactile character and 60 inches maximum from the floor to the baseline of the highest tactile character; and located so that a clear floor space of at least 18 inches by 18 inches, centered on the tactile characters, is provided beyond the arc of any door's swing between the closed and 45 degrees open positions. If not all toilet rooms are accessible, provide signage with the International Symbol of Accessibility at all accessible toilet rooms. Standards §§ 216.2, 703.

(2) The toilet seat cover dispenser controls are mounted at 49 inches above the finished floor over an obstruction. Operable parts and

controls of this element shall be no more than 48 inches high for a forward reach, or no more than 44 inches high if over an obstruction between 20 and 25 inches deep (for a forward reach, obstructions may not be deeper than 25 inches and obstructions must allow knee space); or mounted not more than 48 inches high for a side reach, or no more than 46 inches high if over an obstruction between 10 and 24 inches deep (for a side reach, obstruction may not be deeper than 24 inches); and accompanied by clear floor space of 30 inches by 48 inches that allows a forward or parallel approach, respectively, by a person using a wheelchair. Standards §§ 205.1, 305, 308.2, 308.3.

(3) The top of the lavatory is mounted 35 inches above the finished floor and the water supply and drain pipes are not insulated or otherwise configured to protect against contact. Provide at least 5% of all lavatories and sinks with the top of the rim or counter 34 inches high or less; knee clearance at least 30 inches wide, between 9 inches and 27 inches high, extending between 11 and 25 inches deep at 9 inches high, and extending at least 8 inches deep at 27 inches high; and toe clearance at least 30 inches wide and 9 inches high, and extending between 17 and 25 inches deep under the lavatory; water supply and drain pipes insulated or otherwise configured to protect against contact; no sharp or abrasive surfaces underneath; clear floor space at least 30 inches wide by 48 inches deep positioned for a forward approach (except that a parallel approach with no knee and toe clearance can be provided at a kitchen sink where there is no cook top or conventional range and at wet bars); and a faucet that can be operated with no more than 5 pounds of force and can be used with one hand and without tight grasping, pinching, or twisting of the wrist (lever-operated, push-type, and electronically controlled mechanisms are examples of acceptable designs). Hand-operated metering faucets shall remain open for at least 10 seconds. Standards §§ 213.3.4, 305, 306, 309, 606.

(4) The toilet centerline is 20 inches from the side wall. Provide a toilet with its centerline between 16 and 18 inches from the near side wall. Standards §§ 213.3.2, 604.2.

(5) The toilet flush control is on the closed side. Provide a flush control mounted on the “open” side of the toilet’s clear floor space, between 15 and 48 inches high, and requiring a maximum of 5 pounds of force to operate; or provide an automatic flush device. Standards §§ 213.3.2, 309.4, 604.6.

(6) No accessible coat hook is provided. Provide a coat hook between

15 and 48 inches high accompanied by clear floor space of 30 by 48 inches. Standards §§ 213.3.7, 305, 308, 603.4.

(7) The rear grab bar at the toilet is obstructed by the toilet tank. Provide grab bars that have at least 1½ inches between the grab bar and any object projecting beside or below it and at least 12 inches between the grab bar and any object projecting above it. Standards §§ 213.3.2, 604.5, 609.3.

25. Within 15 months of entry of this Consent Decree, the County will complete the following modifications to the **Ferndale Public Library** located at 807 Main in Ferndale.

a. Accessible Route

i. No directional signs are provided to the accessible entrance. Provide accessible directional signage at inaccessible entrances directing users to the accessible entrance, and provide accessible signage with the International Symbol of Accessibility at all permanent accessible entrances. Standards §§ 216.6, 703.5, 703.7.2.1.

ii. The entry door has knob hardware. Provide a door with hardware, mounted between 34 and 48 inches high, that is operable with one hand and does not require tight grasping, pinching, or twisting of the wrist and requires no more than 5 pounds of force to operate. Lever-operated mechanisms, push-type mechanisms, and U-shaped handles are acceptable designs. Standards §§ 206.4, 206.5, 309.4, 404.2.7.

iii. Ramp. The ramp has a cross slope of 2.3% and there are no 12 inch extensions at the top or bottom of the ramp. Provide a ramp that is at least 36 inches wide between handrails, with a slope not exceeding 8.33% and a cross slope not exceeding 2.08%; with level landings at least as wide as the ramp and 60 inches long at the top and bottom of every ramp run; with level landings at least 60 inches by 60 inches when the ramp changes direction; and with no changes in level other than the slope and cross-slope. The ramp shall have no run containing a rise greater than 30 inches. On each side of ramp runs and landings, provide edge protection that consists of either an extended ground surface at least 12 inches beyond the edge of the surface of the ramp or landing, or a curb or barrier that prevents the passage of a 4 inch diameter sphere where any part of the sphere is within 4 inches of the surface. On both sides of ramps with rises greater than 6 inches, provide handrails that have a diameter between 1¼ and 2 inches or a perimeter between 4 inches and 6¼ inches and a cross section of no more than 2¼ inches such that the handrails are continuous along the full length of the ramp run. Inside handrails on switchbacks or doglegs shall be continuous between runs; handrails shall have a

continuous gripping surface extending at least 12 inches beyond the top and bottom of the ramp parallel with the ground surface; extensions shall return to the wall, guard, or landing surface (or continue on as handrails); handrails shall not rotate within their fittings; handrails shall be mounted at a consistent height between 34 inches and 38 inches above the ramp surface and at least 1½ inches from the wall; gripping surfaces and adjacent surfaces shall be free of sharp or abrasive elements and have rounded edges; and gripping surfaces shall not be obstructed along their tops or sides and the bottoms shall not be obstructed for more than 20% of their length and have no horizontal projections occurring closer than 1½ inches from the bottom of the gripping surface (except that the distance between horizontal projections and the bottom of the gripping surface can be reduced by ⅛ inch for each ½ inch of handrail perimeter over 4 inches). If the ramp is subject to wet conditions, landings shall be designed to prevent the accumulation of water. Standards §§ 206.2, 405, 505.

b. The magazine display is inaccessible because highest part of the rack is 68 inches above the finished floor. Operable parts and controls of this element shall be between 15 and 48 inches high and accompanied by clear floor space of 30 by 48 inches that allows a forward or parallel approach by a person using a wheelchair. Standards §§ 205.1, 305, 308.2, 308.3, 309.

c. Single User Toilet Room

i. The toilet room sign is not mounted on the wall adjacent to the latch side of the door with Braille and raised characters. Provide a toilet room sign with raised and Braille characters. Tactile signs shall be mounted on the wall adjacent to the latch side of the door or the nearest adjacent wall (except that signs can be mounted on the push side of doors with closers and without hold-open devices); mounted 48 inches minimum from floor to the baseline of the lowest tactile character and 60 inches maximum from the floor to the baseline of the highest tactile character; and located so that a clear floor space of at least 18 inches by 18 inches, centered on the tactile characters, is provided beyond the arc of any door's swing between the closed and 45 degrees open positions. If not all toilet rooms are accessible, provide signage with the International Symbol of Accessibility at all accessible toilet rooms. Standards §§ 216.2, 703.

ii. The toilet flush control is on the closed side. Provide a flush control mounted on the "open" side of the toilet's clear floor space, between 15 and 48 inches high, and requiring a maximum of 5 pounds of force to operate; or provide an automatic flush device. Standards §§ 213.3.2, 309.4, 604.6.

iii. The side grab bar at the toilet is 40 inches long. Provide a side grab bar that is at least 42 inches in overall length, with the far end mounted at least

54 inches from the rear wall, and with the closer end no more than 12 inches from the rear wall. Standards §§ 213.3.2, 604.5.1.

iv. The rear grab bar at the toilet is 21 inches long. Provide a rear grab bar that is at least 36 inches long (except where wall space does not permit it due to the location of a recessed fixture, in which case the grab bar may be 24 inches long and centered on the toilet), extending 12 inches from the toilet centerline on one side and 24 inches from the toilet centerline on the other side (except where an administrative authority requires flush controls to be located in a position that conflicts with the location of the rear grab bar, in which case the bar may be split or shifted to the open side). Standards §§ 213.3.2, 604.5.2.

26. Within 15 months of entry of this Consent Decree, the County will complete the following modifications to the **Veterans Memorial Building** located at 1426 Main in Fortuna.

a. Parking. No designated accessible parking spaces are provided. On the shortest accessible route to the accessible entrance, provide one van accessible space designated as reserved for people with disabilities. Provide a van accessible parking space that is a minimum of 132 inches wide and served by an access aisle at least 60 inches wide, or a minimum of 96 inches wide and served by an access aisle at least 96 inches wide; and designated by a vertical sign with the International Symbol of Accessibility and an additional "van accessible" sign mounted at least 60 inches high to the bottom of the signs (unless there are 4 or fewer total parking spaces, in which case, signage is not required). The space and access aisle shall contain no changes in level, with slopes and cross-slopes not exceeding 2.08%, and shall have surfaces that are firm, stable, and slip-resistant; and the access aisle shall be marked so as to discourage parking in it. Standards §§ 208, 302, 502.

b. Accessible Route

i. The double-leaf entrance door has a clear opening width of 29 inches per leaf. Provide a door that has at least one active leaf with a clear opening at least 32 inches wide when measured from the face of the door to the edge of the other door when one door is opened 90 degrees OR provide an automatic opener that opens both doors simultaneously, even with the power off. Automatic door opener operating devices shall be easy to operate with one hand; shall not require tight grasping, pinching, or twisting of the wrist to operate; shall not require more than 5 pounds of force to operate; shall be mounted between 15 and 48 inches high on an accessible route; and shall be accompanied by a clear floor space that is 48 inches by 30 inches and is beyond the arc of the door's swing. Standards §§ 206.5, 305, 308, 309.4, 404.2.3, 404.3.1.

ii. The top of the ramp handrails are 45 inches above the finished floor, are not extended 12 inches at the top or bottom of the ramp, and are not rounded and returned at the ends. On both sides of the ramp, provide handrails that have a diameter between 1¼ and 2 inches or a perimeter between 4 inches and 6¼ inches and a cross section of no more than 2¼ inches such that the handrails are continuous along the full length of the ramp run. Inside handrails on switchbacks or doglegs shall be continuous between runs; handrails shall have a continuous gripping surface extending at least 12 inches beyond the top and bottom of the ramp parallel with the ground surface (except in alterations where extensions would be hazardous due to plan configuration); extensions shall return to the wall, guard, or landing surface (or continue on as handrails); handrails shall not rotate within their fittings; handrails shall be mounted at a consistent height between 34 inches and 38 inches above the ramp surface and at least 1½ inches from the wall; gripping surfaces and adjacent surfaces shall be free of sharp or abrasive elements and have rounded edges; and gripping surfaces shall not be obstructed along their tops or sides and the bottoms shall not be obstructed for more than 20% of their length and have no horizontal projections occurring closer than 1½ inches from the bottom of the gripping surface (except that the distance between horizontal projections and the bottom of the gripping surface can be reduced by ⅛ inch for each ½ inch of handrail perimeter over 4 inches). Standards §§ 206.2, 405.8, 505.

iii. No accessible route is provided connecting the wheelchair seating areas and the stage. Provide an accessible route directly connecting the wheelchair seating locations with the performance area, and the performance area with ancillary areas used by performers (dressing rooms, locker rooms, etc.) unless specifically exempted by the Standards. Standards §§ 206.2.6, 206.2.3, 401.1.

iv. A number of the doors inside the facility have knob hardware. Provide doors with hardware, mounted between 34 and 48 inches high, that is operable with one hand and does not require tight grasping, pinching, or twisting of the wrist and requires no more than 5 pounds of force to operate. Lever-operated mechanisms, push-type mechanisms, and U-shaped handles are acceptable designs. Standards §§ 206.4, 206.5, 309.4, 404.2.7.

c. Toilet Rooms

i. Women's

(1) The toilet room sign is not mounted on the wall adjacent to the latch side of the door with Braille and raised characters. Provide a toilet or locker room sign with raised and Braille characters.

Tactile signs shall be mounted on the wall adjacent to the latch side of the door or the nearest adjacent wall (except that signs can be mounted on the push side of doors with closers and without hold-open devices); mounted 48 inches minimum from floor to the baseline of the lowest tactile character and 60 inches maximum from the floor to the baseline of the highest tactile character; and located so that a clear floor space of at least 18 inches by 18 inches, centered on the tactile characters, is provided beyond the arc of any door's swing between the closed and 45 degrees open positions. If not all toilet rooms are accessible, provide signage with the International Symbol of Accessibility at all accessible toilet rooms. Standards §§ 216.2, 703.

(2) No accessible mirror is provided. Provide at least one mirror such that, if it is mounted above a lavatory or countertop, it is mounted with the bottom edge of the reflecting surface no more than 40 inches high; or, if it is not mounted above a lavatory or countertop, it is mounted with the bottom edge of the reflecting surface no more than 35 inches high. Standards §§ 213.2, 603.3.

(3) Insufficient turning space is provided within the toilet room. Provide an unobstructed turning space at least 60 inches in diameter or a T-shaped space complying with § 304.3.2. Standards §§ 213.2, 304.3, 603.2.1.

(4) The toilet seat cover dispenser is mounted at 54 inches above the finished floor with a forward reach required. Operable parts and controls of this element shall be between 15 and 48 inches high and accompanied by clear floor space of 30 by 48 inches that allows a forward or parallel approach by a person using a wheelchair. Standards §§ 205.1, 305, 308.2, 308.3, 309.

(5) The soap dispenser controls are mounted at 50 inches above the finished floor with a forward reach required. Operable parts and controls of this element shall be between 15 and 48 inches high and accompanied by clear floor space of 30 by 48 inches that allows a forward or parallel approach by a person using a wheelchair. Standards §§ 205.1, 305, 308.2, 308.3, 309.

(6) The lavatory water supply and drain pipes are not insulated or otherwise configured to protect against contact; no knee clearance is provided; and the faucet hardware requires tight grasping, pinching, or twisting of the wrist. Provide at least 5% of all lavatories and sinks with the top of the rim or counter 34 inches high or less; knee clearance at least 30 inches wide, between 9 inches and 27 inches high, extending between 11 and 25 inches

deep at 9 inches high, and extending at least 8 inches deep at 27 inches high; and toe clearance at least 30 inches wide and 9 inches high, and extending between 17 and 25 inches deep under the lavatory; water supply and drain pipes insulated or otherwise configured to protect against contact; no sharp or abrasive surfaces underneath; clear floor space at least 30 inches wide by 48 inches deep positioned for a forward approach (except that a parallel approach with no knee and toe clearance can be provided at a kitchen sink where there is no cook top or conventional range and at wet bars); and a faucet that can be operated with no more than 5 pounds of force and can be used with one hand and without tight grasping, pinching, or twisting of the wrist (lever-operated, push-type, and electronically controlled mechanisms are examples of acceptable designs). Hand-operated metering faucets shall remain open for at least 10 seconds. Standards §§ 213.3.4, 305, 306, 309, 606.

(7) The toilet flush control is on the closed side. Provide a flush control mounted on the "open" side of the toilet's clear floor space, between 15 and 48 inches high, and requiring a maximum of 5 pounds of force to operate; or provide an automatic flush device. Standards §§ 213.3.2, 309.4, 604.6.

(8) No grab bars are provided at the toilet. Provide a rear grab bar that is at least 36 inches long (except where wall space does not permit it due to the location of a recessed fixture, in which case the grab bar may be 24 inches long), extending 12 inches from the toilet centerline on one side and 24 inches on the other side (except where an administrative authority requires flush controls to be located in a position that conflicts with the location of the rear grab bar, in which case the bar may be split or shifted to the open side). Provide a side grab bar that is at least 42 inches in overall length, with the far end mounted at least 54 inches from the rear wall and the closer end no more than 12 inches from the rear wall. Grab bars shall be mounted between 33 and 36 inches high to the top of the gripping surface; with a diameter between 1¼ and 2 inches (or, if the grab bar is not circular, a perimeter between 4 and 4¾ inches and cross-section dimensions of no more than 2 inches); with 1½ inches between the grab bar and the wall; and at least 1½ inches between the grab bar and any object projecting beside or below it and at least 12 inches between the grab bar and any object projecting above it. Grab bars shall also comply with requirements for surface hazards, fittings, and structural strength. Standards §§ 213.3.2, 604.5, 609.

ii. Men's

(1) The toilet room sign is not mounted on the wall adjacent to the latch side of the door with Braille and raised characters. Provide a toilet or locker room sign with raised and Braille characters. Tactile signs shall be mounted on the wall adjacent to the latch side of the door or the nearest adjacent wall (except that signs can be mounted on the push side of doors with closers and without hold-open devices); mounted 48 inches minimum from floor to the baseline of the lowest tactile character and 60 inches maximum from the floor to the baseline of the highest tactile character; and located so that a clear floor space of at least 18 inches by 18 inches, centered on the tactile characters, is provided beyond the arc of any door's swing between the closed and 45 degrees open positions. If not all toilet rooms are accessible, provide signage with the International Symbol of Accessibility at all accessible toilet rooms. Standards §§ 216.2, 703.

(2) No accessible mirror is provided. Provide at least one mirror such that, if it is mounted above a lavatory or countertop, it is mounted with the bottom edge of the reflecting surface no more than 40 inches high; or, if it is not mounted above a lavatory or countertop, it is mounted with the bottom edge of the reflecting surface no more than 35 inches high. Standards §§ 213.2, 603.3.

(3) The toilet seat cover dispenser is mounted at 56 inches above the finished floor with a forward reach required. Operable parts and controls of this element shall be between 15 and 48 inches high and accompanied by clear floor space of 30 by 48 inches that allows a forward or parallel approach by a person using a wheelchair. Standards §§ 205.1, 305, 308.2, 308.3, 309.

(4) The lavatory has no knee clearance, the water supply and drain pipes are not insulated or otherwise configured to protect against contact; there is insufficient clear floor space around the sink; and the faucet hardware requires tight grasping, pinching, or twisting the wrist. Provide at least 5% of all lavatories and sinks with the top of the rim or counter 34 inches high or less; knee clearance at least 30 inches wide, between 9 inches and 27 inches high, extending between 11 and 25 inches deep at 9 inches high, and extending at least 8 inches deep at 27 inches high; and toe clearance at least 30 inches wide and 9 inches high, and extending between 17 and 25 inches deep under the lavatory; water supply and drain pipes insulated or otherwise configured to protect against contact; no sharp or abrasive surfaces underneath; clear floor space at least 30 inches wide by 48 inches deep positioned for a forward approach (except that a parallel approach with no knee and toe

clearance can be provided at a kitchen sink where there is no cook top or conventional range and at wet bars); and a faucet that can be operated with no more than 5 pounds of force and can be used with one hand and without tight grasping, pinching, or twisting of the wrist (lever-operated, push-type, and electronically controlled mechanisms are examples of acceptable designs). Hand-operated metering faucets shall remain open for at least 10 seconds. Standards §§ 213.3.4, 305, 306, 309, 606.

(5) No accessible coat hook is provided. Provide a coat hook between 15 and 48 inches high accompanied by clear floor space of 30 by 48 inches. Standards §§ 213.3.7, 305, 308, 603.4.

(6) No grab bars are provided at the toilet. Provide a rear grab bar that is at least 36 inches long (except where wall space does not permit it due to the location of a recessed fixture, in which case the grab bar may be 24 inches long), extending 12 inches from the toilet centerline on one side and 24 inches on the other side (except where an administrative authority requires flush controls to be located in a position that conflicts with the location of the rear grab bar, in which case the bar may be split or shifted to the open side). Provide a side grab bar that is at least 42 inches in overall length, with the far end mounted at least 54 inches from the rear wall and the closer end no more than 12 inches from the rear wall. Grab bars shall be mounted between 33 and 36 inches high to the top of the gripping surface; with a diameter between 1¼ and 2 inches (or, if the grab bar is not circular, a perimeter between 4 and 4¾ inches and cross-section dimensions of no more than 2 inches); with 1½ inches between the grab bar and the wall; and at least 1½ inches between the grab bar and any object projecting beside or below it and at least 12 inches between the grab bar and any object projecting above it. Grab bars shall also comply with requirements for surface hazards, fittings, and structural strength. Standards §§ 213.3.2, 604.5, 609.

(7) The toilet compartment door is located on the front partition directly in front of the toilet. Provide a toilet compartment door complying with § 404 except that, if the approach is to the latch side of the compartment door, clearance between the door side of the compartment and any obstruction shall be at least 42 inches. Doors shall be located in the front partition or in the side wall or partition farthest from the toilet. If located in the front partition, the door opening shall be at least 4 inches from the side wall or partition farthest from the toilet. Where located in the side wall or partition, the door opening shall be at least 4 inches from the front partition. The door shall be self-closing, and a door pull complying

with § 404.2.7 shall be placed on both sides of the door near the latch. Toilet compartment doors shall not swing into the minimum required compartment area. Standards §§ 213.3.1, 404, 604.8.1.2.

27. Within 9 months of entry of this Consent Decree, the County will complete the following modifications to **Freshwater Park** located at 3100 Freshwater Road in Eureka.

a. Accessible Route. The surface of the route from the parking to the picnic pavilion, volley ball court, toilet rooms, drinking fountain, and the playground is not stable, firm, and slip resistant. To each area, feature, or element described, provide at least one accessible route that coincides with or is located in the same area as general circulation paths. The accessible route must have a minimum clear width of 36 inches (except that it may narrow to no less than 32 inches for a length of no more than 24 inches), or a minimum clear width of 42 inches if there is a U-turn around an obstruction less than 48 inches wide; have passing spaces at least every 200 feet; have a minimum clear headroom of 80 inches; have a surface that is firm, stable, and slip resistant; have, in the absence of a curb ramp, ramp, elevator, or platform lift, no level changes in excess of ½ inch vertically; have no level changes greater than ¼ inch vertically unless they are beveled with a slope no greater than 50%; and have a running slope no greater than 5% (or have been constructed as a fully accessible ramp) and a cross slope no greater than 2.08%. Standards §§ 206, 301.1, 401.1.

b. Toilet Rooms

i. The men's toilet room contains a number of inaccessible elements and is not accessible to people with disabilities. Provide an accessible toilet room such that all of the room's elements, including signage, door, door hardware, clear floor space, toilet, stall size and arrangement (if any), urinal (if provided), grab bars, lavatory, mirror, controls, and dispensers, comply with the Standards. Standards §§ 204, 205, 206, 213, 216, 225, 301.1, 401.1, 601.1, 703, 811.

ii. The women's toilet room contains a number of inaccessible elements and is not accessible to people with disabilities. Provide an accessible toilet room such that all of the room's elements, including signage, door, door hardware, clear floor space, toilet, stall size and arrangement (if any), urinal (if provided), grab bars, lavatory, mirror, controls, and dispensers, comply with the Standards. Standards §§ 204, 205, 206, 213, 216, 225, 301.1, 401.1, 601.1, 703, 811.

Attachment J: Access to Humboldt County Programs Housed in Others' Facilities

Please Note: Paragraph 47 of the Consent Decree requires that, within nine months of entry of this Consent Decree, the County provide signage as necessary to comply with 28 C.F.R. § 35.163(b), after having surveyed all facilities that are the subject of this Consent Decree for the purpose of identifying those that have multiple entrances not all of which are accessible.

The technical requirements and, where appropriate, the scoping requirements of the 2010 ADA Standards are used as a guide for determining whether a program or activity held in an existing facility is "readily accessible to and usable by" persons with disabilities and for determining what changes are necessary to make this program or activity accessible if it continues to be provided in the existing facility in question. *See* 28 C.F.R. §§ 35.150(b)(1), 35.151. The term "Standards" refers to the 2010 ADA Standards for Accessible Design (28 C.F.R. § 35.104 (Title II) (defining the "2010 Standards" as the requirements set forth in appendices B and D to 36 C.F.R. part 1191 and the requirements contained in 28 C.F.R. § 35.151.)). All citations are to the Standards, unless otherwise noted.

1. In order that the following programs, services, and activities, when viewed in their entirety, will be made accessible to persons with disabilities, the County will take the following actions:

2. Within 9 months of entry of the Consent Decree, the County will complete the following modifications to **Public Health MCAH** (Altered) located at 317 2nd Street in Eureka.

    a. Parking (owned by City)

        i. No designated van accessible parking space is provided. Provide a van accessible parking space that is a minimum of 132 inches wide and served by an access aisle at least 60 inches wide, or a minimum of 96 inches wide and served by an access aisle at least 96 inches wide; and designated by a vertical sign with the International Symbol of Accessibility and an additional "van accessible" sign mounted at least 60 inches high to the bottom of the signs (unless there are 4 or fewer total parking spaces, in which case, signage is not required). The space and access aisle shall contain no changes in level, with slopes and cross-slopes not exceeding 2.08%, and shall have surfaces that are firm, stable, and slip-resistant; and the access aisle shall be marked so as to discourage parking in it. Standards §§ 208, 302, 502.

    b. Offices

        i. The meeting room and office doors have knob hardware. Provide a door with hardware, mounted between 34 and 48 inches high, that is operable with one hand and does not require tight grasping, pinching, or twisting of the wrist and requires no more than 5 pounds of force to operate. Lever-operated mechanisms, push-type mechanisms, and U-shaped handles are

acceptable designs. Standards §§ 206.4, 206.5, 309.4, 404.2.7.

c. Unisex Single User

i. The toilet room sign is not mounted on the wall adjacent to the latch side of the door. Provide a toilet room sign with raised and Braille characters. Tactile signs shall be mounted on the wall adjacent to the latch side of the door or the nearest adjacent wall (except that signs can be mounted on the push side of doors with closers and without hold-open devices); mounted 48 inches minimum from floor to the baseline of the lowest tactile character and 60 inches maximum from the floor to the baseline of the highest tactile character; and located so that a clear floor space of at least 18 inches by 18 inches, centered on the tactile characters, is provided beyond the arc of any door's swing between the closed and 45 degrees open positions. If not all toilet rooms are accessible, provide signage with the International Symbol of Accessibility at all accessible toilet rooms. Standards §§ 216.2, 703.

ii. The door to the toilet room has 11 inches of clear floor space on the latch side in the pull direction. Provide maneuvering clearance at least 60 inches deep perpendicular to the doorway and at least 18 inches wide parallel to the doorway on the latch side. Standards §§ 206.5, 404.2.4.1.

iii. No accessible mirror is provided. Provide at least one mirror such that, if it is mounted above a lavatory or countertop, it is mounted with the bottom edge of the reflecting surface no more than 40 inches high; or, if it is not mounted above a lavatory or countertop, it is mounted with the bottom edge of the reflecting surface no more than 35 inches high. Standards §§ 213.2, 603.3.

iv. The toilet seat cover dispenser controls are mounted at 47 inches above the finished floor over an obstruction. Operable parts and controls of this element shall be no more than 48 inches high for a forward reach, or no more than 44 inches high if over an obstruction between 20 and 25 inches deep (for a forward reach, obstructions may not be deeper than 25 inches and obstructions must allow knee space); or mounted not more than 48 inches high for a side reach, or no more than 46 inches high if over an obstruction between 10 and 24 inches deep (for a side reach, obstructions may not be deeper than 24 inches); and accompanied by clear floor space of 30 inches by 48 inches that allows a forward or parallel approach, respectively, by a person using a wheelchair. Standards §§ 205.1, 305, 308.2, 308.3.

v. The toilet has insufficient clear floor space. Provide clearance at the toilet that is at least 60 inches wide and 56 inches deep. This clearance may overlap with the toilet, grab bars, dispensers, sanitary napkin disposal, coat

hooks, shelves, accessible routes, clear floor space and clearances for other fixtures, and turning space; but no other fixtures or obstructions, including lavatories, may be located within this clearance. Standards §§ 213.3.2, 604.3.

3. Within 15 months of entry of the Consent Decree, the County will complete the following modifications to the **Social Services Branch** (Altered) located at 808 E Street in Eureka.

a. Parking

i. No designated van accessible parking space is provided. Provide a van accessible parking space that is a minimum of 132 inches wide and served by an access aisle at least 60 inches wide, or a minimum of 96 inches wide and served by an access aisle at least 96 inches wide; and designated by a vertical sign with the International Symbol of Accessibility and an additional "van accessible" sign mounted at least 60 inches high to the bottom of the signs (unless there are 4 or fewer total parking spaces, in which case, signage is not required). The space and access aisle shall contain no changes in level, with slopes and cross-slopes not exceeding 2.08%, and shall have surfaces that are firm, stable, and slip-resistant; and the access aisle shall be marked so as to discourage parking in it. Standards §§ 208, 302, 502.

b. Offices

i. The door to Meeting Room #34 has knob hardware. Provide a door with hardware, mounted between 34 and 48 inches high, that is operable with one hand and does not require tight grasping, pinching, or twisting of the wrist and requires no more than 5 pounds of force to operate. Lever-operated mechanisms, push-type mechanisms, and U-shaped handles are acceptable designs. Standards §§ 206.4, 206.5, 309.4, 404.2.7.

ii. The door to Psych Counseling #14 has knob hardware. Provide a door with hardware, mounted between 34 and 48 inches high, that is operable with one hand and does not require tight grasping, pinching, or twisting of the wrist and requires no more than 5 pounds of force to operate. Lever-operated mechanisms, push-type mechanisms, and U-shaped handles are acceptable designs. Standards §§ 206.4, 206.5, 309.4, 404.2.7.

c. Toilet Rooms

i. Women's

(1) The toilet room sign is not mounted on the wall adjacent to the latch side of the door. Provide a toilet room sign with raised and

Braille characters. Tactile signs shall be mounted on the wall adjacent to the latch side of the door or the nearest adjacent wall (except that signs can be mounted on the push side of doors with closers and without hold-open devices); mounted 48 inches minimum from floor to the baseline of the lowest tactile character and 60 inches maximum from the floor to the baseline of the highest tactile character; and located so that a clear floor space of at least 18 inches by 18 inches, centered on the tactile characters, is provided beyond the arc of any door's swing between the closed and 45 degrees open positions. If not all toilet rooms are accessible, provide signage with the International Symbol of Accessibility at all accessible toilet rooms. Standards §§ 216.2, 703.

(2) The pressure required to open the entry door is 10 pounds. Provide a door that requires no more than 5 pounds of force to open (not including the initial force needed to overcome inertia, retracting bolts, etc.). Standards §§ 206.5, 404.2.9.

(3) The entry door maneuvering clearance is obstructed by the trash receptacle on the pull side of the door. Provide maneuvering clearance at least 60 inches deep perpendicular to the doorway and at least 18 inches wide parallel to the doorway on the latch side. §§ 206.5, 404.2.4.1.

(4) The toilet room door swings into the required clear floor space at the paper towel dispenser and the sanitary napkin dispenser. No door shall swing into the required clear floor space or clearance at any accessible fixture (*e.g.*, toilet, urinal, lavatory). Standards §§ 213.2, 603.2.3.

(5) Insufficient turning space is provided within the toilet room. Provide an unobstructed turning space at least 60 inches in diameter or a T-shaped space complying with § 304.3.2. Standards §§ 213.2, 304.3, 603.2.1.

(6) The toilet compartment door has an opening width of 27 inches. Provide a self-closing compartment door at least 32 inches wide either in the front partition or side partition farthest from the toilet. § 404.2.3.

(7) The toilet stall does not allow diagonal approach to transfer space. Provide a toilet compartment door complying with § 404 except that, if the approach is to the latch side of the compartment door, clearance between the door side of the compartment and any obstruction shall be at least 42 inches. Doors shall be located in

the front partition or in the side wall or partition farthest from the toilet. If located in the front partition, the door opening shall be at least 4 inches from the side wall or partition farthest from the toilet. Where located in the side wall or partition, the door opening shall be at least 4 inches from the front partition. The door shall be self-closing, and a door pull complying with § 404.2.7 shall be placed on both sides of the door near the latch. Toilet compartment doors shall not swing into the minimum required compartment area. Standards §§ 213.3.1, 404, 604.8.1.2.

(8) The closer end of the side grab bar at the toilet is mounted 13 inches from the rear wall and the bar is mounted 32 inches high. Provide a side grab bar that is at least 42 inches in overall length, with the far end mounted at least 54 inches from the rear wall, and with the closer end no more than 12 inches from the rear wall. Standards §§ 213.3.2, 604.5.1.

(9) The closer end of the rear grab bar at the toilet is mounted 10 inches from the side wall. Provide a rear grab bar that is at least 36 inches long (except where wall space does not permit it due to the location of a recessed fixture, in which case the grab bar may be 24 inches long and centered on the toilet), extending 12 inches from the toilet centerline on one side and 24 inches from the toilet centerline on the other side (except where an administrative authority requires flush controls to be located in a position that conflicts with the location of the rear grab bar, in which case the bar may be split or shifted to the open side). Standards §§ 213.3.2, 604.5.2.

ii. Men's

(1) The toilet room sign is not mounted on the wall adjacent to the latch side of the door. Provide a toilet room sign with raised and Braille characters. Tactile signs shall be mounted on the wall adjacent to the latch side of the door or the nearest adjacent wall (except that signs can be mounted on the push side of doors with closers and without hold-open devices); mounted 48 inches minimum from floor to the baseline of the lowest tactile character and 60 inches maximum from the floor to the baseline of the highest tactile character; and located so that a clear floor space of at least 18 inches by 18 inches, centered on the tactile characters, is provided beyond the arc of any door's swing between the closed and 45 degrees open positions. If not all toilet rooms are accessible, provide signage with the International Symbol of Accessibility at all accessible toilet rooms. Standards §§ 216.2, 703.

(2) The pressure required to open the door entry is 15 pounds. Provide a door that requires no more than 5 pounds of force to open (not including the initial force needed to overcome inertia, retracting bolts, etc.). Standards §§ 206.5, 404.2.9.

(3) The entry door maneuvering clearance is obstructed by the trash receptacle on the pull side of the door. Provide maneuvering clearance at least 60 inches deep perpendicular to the doorway and at least 18 inches wide parallel to the doorway. Standards §§ 206.5, 404.2.4.1.

(4) The urinal rim is higher than 17 inches above the finished floor and the flush control is 54 inches above the finished floor. Provide a stall-type or a wall-hung urinal with a rim mounted 17 inches high or less; a depth of at least 13½ inches from the outer face to the rear of the urinal; a clear floor space at least 30 inches wide and 48 inches deep positioned for a forward approach; and a flush control between 15 and 48 inches high or an automatic flush. Standards §§ 213.3.3, 305, 308.2, 309.4, 605.

(5) The toilet stall does not allow diagonal approach to transfer space. Provide a toilet compartment door complying with § 404 except that, if the approach is to the latch side of the compartment door, clearance between the door side of the compartment and any obstruction shall be at least 42 inches. Doors shall be located in the front partition or in the side wall or partition farthest from the toilet. If located in the front partition, the door opening shall be at least 4 inches from the side wall or partition farthest from the toilet. Where located in the side wall or partition, the door opening shall be at least 4 inches from the front partition. The door shall be self-closing, and a door pull complying with § 404.2.7 shall be placed on both sides of the door near the latch. Toilet compartment doors shall not swing into the minimum required compartment area. Standards §§ 213.3.1, 404, 604.8.1.2.

(6) No accessible coat hook is provided. Provide a coat hook or towel hook between 15 and 48 inches high accompanied by clear floor space of 30 by 48 inches. Standards §§ 213.3.7, 305, 308, 603.4.

(7) The closer end of the side grab bar at the toilet is mounted 13 inches from the rear wall. Provide a side grab bar that is at least 42 inches in overall length, with the far end mounted at least 54 inches from the rear wall, and with the closer end no more than 12 inches from the rear wall. Standards §§ 213.3.2, 604.5.1.

(8) The closer end of the rear grab bar at the toilet is mounted at 9½ inches from the side wall. Provide a rear grab bar that is at least 36 inches long (except where wall space does not permit it due to the location of a recessed fixture, in which case the grab bar may be 24 inches long and centered on the toilet), extending 12 inches from the toilet centerline on one side and 24 inches from the toilet centerline on the other side (except where an administrative authority requires flush controls to be located in a position that conflicts with the location of the rear grab bar, in which case the bar may be split or shifted to the open side). Standards §§ 213.3.2, 604.5.2.

4. Within 9 months of entry of the Consent Decree, the County will complete the following modifications to **Child Support Services**, located at 2420 Sixth Street in Eureka.

a. Parking

i. No designated van accessible parking space is provided. Provide a van accessible parking space that is a minimum of 132 inches wide and served by an access aisle at least 60 inches wide, or a minimum of 96 inches wide and served by an access aisle at least 96 inches wide; and designated by a vertical sign with the International Symbol of Accessibility and an additional "van accessible" sign mounted at least 60 inches high to the bottom of the signs (unless there are 4 or fewer total parking spaces, in which case, signage is not required). The space and access aisle shall contain no changes in level, with slopes and cross-slopes not exceeding 2.08%, and shall have surfaces that are firm, stable, and slip-resistant; and the access aisle shall be marked so as to discourage parking in it. Standards §§ 208, 302, 502.

ii. The signage designating parking reserved for persons with disabilities is not mounted at each accessible space. At sites with 5 or more parking spaces, provide vertical signs with the International Symbol of Accessibility at all spaces designated as reserved for persons with disabilities, and, at van accessible parking spaces, provide an additional "van accessible" sign. Mount signs at least 60 inches high to the bottom of the sign. Standards §§ 208, 216.5, 502.6, 703.7.2.1.

b. The reception counter protrudes into the walkway and is not detectable to a blind person using a cane. Unless protected by a cane detectable barrier, objects with their leading edges between 27 inches and 80 inches high shall not protrude into circulation paths more than 4 inches for wall-mounted elements, or 12 inches for free standing post- or pylon-mounted elements. Protruding objects (and cane-detectable barriers) shall not reduce the clear width of accessible routes or maneuvering spaces below minimum requirements. Standards §§ 206, 307.

c. Offices

i. Secured meeting room - The pressure required to open the door is 10 pounds. Provide a door that requires no more than 5 pounds of force to open (not including the initial force needed to overcome inertia, retracting bolts, etc.). Standards §§ 206.5, 404.2.9.

ii. Non-secured meeting room - The pressure required to open the door is 10 pounds. Provide a door that requires no more than 5 pounds of force to open (not including the initial force needed to overcome inertia, retracting bolts, etc.). Standards §§ 206.5, 404.2.9.

d. Drinking Fountain

i. The drinking fountain has a spout that is 37 inches above the finished floor. Provide 50% of all drinking fountains on each floor or exterior site with a spout outlet between 38 and 43 inches high and 50% of all drinking fountains on each floor or exterior site with a spout outlet no more than 36 inches high that otherwise complies with the Standards. At least one of each type shall be provided. Standards §§ 211, 602.4, 602.7.

5. Within 9 months of entry of the Consent Decree, the County will complete the following modifications to the **McKinleyville Sheriff's Substation**, located at 1608 Pickett Street in McKinleyville.

a. Parking

i. The designated accessible van parking space lacks the required signage. At sites with 5 or more parking spaces, provide vertical signs with the International Symbol of Accessibility at all spaces designated as reserved for persons with disabilities, and, at van accessible parking spaces, provide an additional "van accessible" sign. Mount signs at least 60 inches high to the bottom of the sign. Standards §§ 208, 216.5, 502.6, 703.7.2.1.

ii. The built-up curb ramp extends into the parking space access aisle. At each accessible parking space, provide an access aisle that is at least 60 inches wide, except at van accessible parking spaces that are less than 132 inches wide, in which case provide an access aisle at least 96 inches wide. All access aisles shall adjoin an accessible route; extend the full length of the parking space they serve; be marked so as to discourage parking in them; contain no changes in level, with slopes and cross-slopes not exceeding 2.08%; and have surfaces that are firm, stable, and slip-resistant. Standards §§ 208, 302, 502.

b. Counter - The counter is 43 inches high. Provide counters dispersed throughout the facility (dispersion is not required where only 1 counter is provided) on

accessible routes such that each counter has a portion extending the same depth as the counter top and no more than 36 inches high. If a parallel approach is provided, the accessible portion of the counter shall be at least 36 inches long (unless the entire counter is less than 36 inches high) and have clear floor space positioned for a parallel approach; if a forward approach is provided, the accessible portion of the counter shall be at least 30 inches long and have knee and toe space provided under the counter and clear floor space positioned for a forward approach. Standards §§ 227.3, 305, 306, 904.4.

6. Within 9 months of entry of the Consent Decree, the County will complete the following modifications to the **McKinleyville Library** located at 1606 Pickett Road in McKinleyville.

a. Toilet Rooms

i. Men's

(1) The toilet room sign is not mounted on the wall adjacent to the latch side of the door more than 60 inches above the finished floor. Provide a toilet room sign with raised and Braille characters. Tactile signs shall be mounted on the wall adjacent to the latch side of the door or the nearest adjacent wall (except that signs can be mounted on the push side of doors with closers and without hold-open devices); mounted 48 inches minimum from floor to the baseline of the lowest tactile character and 60 inches maximum from the floor to the baseline of the highest tactile character; and located so that a clear floor space of at least 18 inches by 18 inches, centered on the tactile characters, is provided beyond the arc of any door's swing between the closed and 45 degrees open positions. If not all toilet rooms are accessible, provide signage with the International Symbol of Accessibility at all accessible toilet rooms. Standards §§ 216.2, 703.

(2) The pressure required to open the door is 11 pounds. Provide a door that requires no more than 5 pounds of force to open (not including the initial force needed to overcome inertia, retracting bolts, etc.). Standards §§ 206.5, 404.2.9.

(3) The toilet centerline is 19 inches from the side wall. Provide a toilet with its centerline between 16 and 18 inches from the near side wall. Standards §§ 213.3.2, 604.2.

(4) No accessible coat hook is provided. Provide a coat hook or towel hook between 15 and 48 inches high accompanied by clear floor space of 30 by 48 inches. Standards §§ 213.3.7, 305, 308, 603.4.

ii. Women's

(1) The toilet room sign is not mounted on the wall adjacent to the latch side of the door more than 60 inches above the finished floor. Provide a toilet room sign with raised and Braille characters. Tactile signs shall be mounted on the wall adjacent to the latch side of the door or the nearest adjacent wall (except that signs can be mounted on the push side of doors with closers and without hold-open devices); mounted 48 inches minimum from floor to the baseline of the lowest tactile character and 60 inches maximum from the floor to the baseline of the highest tactile character; and located so that a clear floor space of at least 18 inches by 18 inches, centered on the tactile characters, is provided beyond the arc of any door's swing between the closed and 45 degrees open positions. If not all toilet rooms are accessible, provide signage with the International Symbol of Accessibility at all accessible toilet rooms. Standards §§ 216.2, 703.

(2) The toilet centerline is 20 inches from the side wall. Provide a toilet with its centerline between 16 and 18 inches from the near side wall. Standards §§ 213.3.2, 604.2.

(3) No accessible coat hook is provided. Provide a coat hook or towel hook between 15 and 48 inches high accompanied by clear floor space of 30 by 48 inches. Standards §§ 213.3.7, 305, 308, 603.4.

7. Within 9 months of entry of the Consent Decree, the County will complete the following modifications to **Redwood Regional Development**, 520 E. Street in Eureka.

a. Men's

i. The toilet room sign is not mounted on the wall adjacent to the latch side of the door. Provide a toilet room sign with raised and Braille characters. Tactile signs shall be mounted on the wall adjacent to the latch side of the door or the nearest adjacent wall (except that signs can be mounted on the push side of doors with closers and without hold-open devices); mounted 48 inches minimum from floor to the baseline of the lowest tactile character and 60 inches maximum from the floor to the baseline of the highest tactile character; and located so that a clear floor space of at least 18 inches by 18 inches, centered on the tactile characters, is provided beyond the arc of any door's swing between the closed and 45 degrees open positions. If not all toilet rooms are accessible, provide signage with the International Symbol of Accessibility at all accessible toilet rooms. Standards §§ 216.2, 703.

ii. The pressure required to open the door is 7 pounds. Provide a door that

requires no more than 5 pounds of force to open (not including the initial force needed to overcome inertia, retracting bolts, etc.). Standards §§ 206.5, 404.2.9.

iii. No accessible mirror is provided. Provide at least one mirror such that, if it is mounted above a lavatory or countertop, it is mounted with the bottom edge of the reflecting surface no more than 40 inches high; or, if it is not mounted above a lavatory or countertop, it is mounted with the bottom edge of the reflecting surface no more than 35 inches high. Standards §§ 213.2, 603.3.

iv. The toilet flush control is on the closed side. Provide a flush control mounted on the "open" side of the toilet's clear floor space, between 15 and 48 inches high, and requiring a maximum of 5 pounds of force to operate; or provide an automatic flush device. Standards §§ 213.3.2, 309.4, 604.6.

v. No accessible coat hook is provided. Provide a coat hook or towel hook between 15 and 48 inches high accompanied by clear floor space of 30 by 48 inches. Standards §§ 213.3.7, 305, 308, 603.4.

b. Women's

i. The toilet room sign is not mounted on the wall adjacent to the latch side of the door. Provide a toilet room sign with raised and Braille characters. Tactile signs shall be mounted on the wall adjacent to the latch side of the door or the nearest adjacent wall (except that signs can be mounted on the push side of doors with closers and without hold-open devices); mounted 48 inches minimum from floor to the baseline of the lowest tactile character and 60 inches maximum from the floor to the baseline of the highest tactile character; and located so that a clear floor space of at least 18 inches by 18 inches, centered on the tactile characters, is provided beyond the arc of any door's swing between the closed and 45 degrees open positions. If not all toilet rooms are accessible, provide signage with the International Symbol of Accessibility at all accessible toilet rooms. Standards §§ 216.2, 703.

ii. The pressure required to open the door is 7 pounds. Provide a door that requires no more than 5 pounds of force to open (not including the initial force needed to overcome inertia, retracting bolts, etc.). Standards §§ 206.5, 404.2.9.

iii. No accessible mirror is provided. Provide at least one mirror such that, if it is mounted above a lavatory or countertop, it is mounted with the bottom edge of the reflecting surface no more than 40 inches high; or, if it is not mounted above a lavatory or countertop, it is mounted with the bottom

edge of the reflecting surface no more than 35 inches high. Standards §§ 213.2, 603.3.

iv. The toilet flush control is on the closed side. Provide a flush control mounted on the "open" side of the toilet's clear floor space, between 15 and 48 inches high, and requiring a maximum of 5 pounds of force to operate; or provide an automatic flush device. Standards §§ 213.3.2, 309.4, 604.6.

v. No accessible coat hook is provided. Provide a coat hook or towel hook between 15 and 48 inches high accompanied by clear floor space of 30 by 48 inches. Standards §§ 213.3.7, 305, 308, 603.4.

8. Within 15 months of entry of the Consent Decree, the County will complete the following modifications to **Social Services Building C**, 600 W. Clark in Eureka.

a. Parking

i. The designated van accessible parking space and access aisle are not level. Provide designated accessible parking spaces and access aisles that contain no changes in level, with slopes and cross-slopes not exceeding 2.08%, with surfaces that are firm, stable, and slip-resistant. Standards §§ 208, 302, 502.4.

b. Accessible Route

i. The entrance door pull side maneuvering space is obstructed by a planter. Provide a clear floor or ground space at least 48 inches deep perpendicular to the doorway and at least 24 wide parallel to the doorway on the latch side. Standards §§ 206.5, 404.2.4.1.

c. Offices

i. The door to the conference room has an opening width of 29 inches. Provide a door with a clear opening at least 32 inches wide, measured between the face of the door and the opposite stop, when the door is open 90 degrees. Standards §§ 206.4, 206.5, 404.2.3.

d. Drinking Fountain

i. No drinking fountain is provided for people who have difficulty bending or stooping. Provide 50% of all drinking fountains on each floor or exterior site with a spout outlet between 38 and 43 inches high and 50% of all drinking fountains on each floor or exterior site with a spout outlet no more than 36 inches high that otherwise complies with the Standards. At least one of each type shall be provided. Standards §§ 211, 602.4, 602.7.

e. Toilet Rooms

i. Women's

(1) The paper towel dispenser controls are mounted 54 inches above the finished floor with a forward reach required. Operable parts and controls of this element shall be between 15 and 48 inches high and accompanied by clear floor space of 30 by 48 inches that allows a forward or parallel approach by a person using a wheelchair. Standards §§ 205.1, 305, 308.2, 308.3, 309.

(2) The sanitary napkin dispenser controls are mounted 58 inches above the finished floor. Operable parts and controls of this element shall be between 15 and 48 inches high and accompanied by clear floor space of 30 by 48 inches that allows a forward or parallel approach by a person using a wheelchair. Standards §§ 205.1, 305, 308.2, 308.3, 309.

(3) The toilet stall is not configured so as to be accessible. Provide an accessible toilet compartment at least 60 inches wide and at least 59 inches deep (or at least 56 inches deep with a wall-mounted toilet) such that all of the compartment's elements, including door, door hardware, toilet, size and arrangement, toe clearances, grab bars, controls, and dispensers, comply with the Standards. Standards §§ 213.3.1, 301.1, 404, 604, 604.8.1, 609.

9. Within 15 months of entry of the Consent Decree, the County will complete the following modifications to the **Mental Health - Child Youth and Family Services**, located at 1711 3rd Street in Eureka.

a. Parking

i. No designated van accessible parking space or access aisle is provided and the pavement markings are not clear. Provide a van accessible parking space that is a minimum of 132 inches wide and served by an access aisle at least 60 inches wide, or a minimum of 96 inches wide and served by an access aisle at least 96 inches wide; and designated by a vertical sign with the International Symbol of Accessibility and an additional "van accessible" sign mounted at least 60 inches high to the bottom of the signs (unless there are 4 or fewer total parking spaces, in which case, signage is not required). The space and access aisle shall contain no changes in level, with slopes and cross-slopes not exceeding 2.08%, and shall have surfaces that are firm, stable, and slip-resistant; and the access aisle shall be marked so as to discourage parking in it. Standards §§ 208, 302, 502.

b. Accessible Route

i. The route from the parking lot into the building is not stable, firm or slip resistant and the surface is not level. To each area, feature, or element described, provide at least one accessible route that coincides with or is located in the same area as general circulation paths. The accessible route must have a minimum clear width of 36 inches (except that it may narrow to no less than 32 inches for a length of no more than 24 inches), or a minimum clear width of 42 inches if there is a U-turn around an obstruction less than 48 inches wide; have passing spaces at least every 200 feet; have a minimum clear headroom of 80 inches; have a surface that is firm, stable, and slip resistant; have, in the absence of a curb ramp, ramp, elevator, or platform lift, no level changes in excess of ½ inch vertically; have no level changes greater than ¼ inch vertically unless they are beveled with a slope no greater than 50%; and have a running slope no greater than 5% (or have been constructed as a fully accessible ramp) and a cross slope no greater than 2.08%. Standards §§ 206, 301.1, 401.1.

ii. The entrance has no level approach within the door's required maneuvering clearance. The floor or ground area within the door's required clearances shall have a slope no greater than 2.08%, or an automatic door opener with standby power or that remains open with the power off. All automatic door opener operating devices shall be easy to operate with one hand; shall not require tight grasping, pinching, or twisting of the wrist to operate; shall not require more than 5 pounds of force to operate; shall be mounted between 15 and 48 inches high on an accessible route; and shall be accompanied by a clear floor space that is 48 inches by 30 inches and is beyond the arc of the door's swing. Standards §§ 206.4, 305, 308, 309.4, 404.2.4.4, 404.3.5.

c. No signage directing people with disabilities to the accessible toilet rooms is provided. Provide accessible directional signage with the International Symbol of Accessibility at inaccessible toilet rooms indicating the location of the nearest accessible toilet room, and provide accessible signage with the International Symbol of Accessibility at all accessible toilet rooms. Standards §§ 216.3, 216.8, 703.5, 703.7.2.1.

d. Toilet Room - "Designated Accessible"

i. No accessible toilet room sign is provided. Provide a toilet room sign with raised and Braille characters. Tactile signs shall be mounted on the wall adjacent to the latch side of the door or the nearest adjacent wall (except that signs can be mounted on the push side of doors with closers and without hold-open devices); mounted 48 inches minimum from floor to the baseline of the lowest tactile character and 60 inches maximum

from the floor to the baseline of the highest tactile character; and located so that a clear floor space of at least 18 inches by 18 inches, centered on the tactile characters, is provided beyond the arc of any door's swing between the closed and 45 degrees open positions. If not all toilet rooms are accessible, provide signage with the International Symbol of Accessibility at all accessible toilet rooms. Standards §§ 216.2, 703.

ii. No accessible mirror is provided. Provide at least one mirror such that, if it is mounted above a lavatory or countertop, it is mounted with the bottom edge of the reflecting surface no more than 40 inches high; or, if it is not mounted above a lavatory or countertop, it is mounted with the bottom edge of the reflecting surface no more than 35 inches high. Standards §§ 213.2, 603.3.

iii. The toilet seat cover dispenser is beyond required reach ranges. Operable parts and controls of this element shall be no more than 48 inches high for a forward reach, or no more than 44 inches high if over an obstruction between 20 and 25 inches deep (for a forward reach, obstructions may not be deeper than 25 inches and obstructions must allow knee space); or mounted not more than 48 inches high for a side reach, or no more than 46 inches high if over an obstruction between 10 and 24 inches deep (for a side reach, obstructions may not be deeper than 24 inches); and accompanied by clear floor space of 30 inches by 48 inches that allows a forward or parallel approach, respectively, by a person using a wheelchair. Standards §§ 205.1, 305, 308.2, 308.3.

iv. The lavatory hot water pipes are not insulated or otherwise configured to protect against contact. Provide water supply and drain pipes insulated or otherwise configured to protect against contact. There shall be no sharp or abrasive surfaces underneath the lavatory or sink. Standards §§ 213.3.4, 606.5.

v. The toilet seat is 16 inches above the finished floor. Provide a toilet with the top of the seat 17 to 19 inches high. The seat shall not be sprung to return to a lifted position. Standards §§ 213.3.2, 604.4.29.

vi. No grab bars provided are provided. Provide a rear grab bar that is at least 36 inches long (except where wall space does not permit it due to the location of a recessed fixture, in which case the grab bar may be 24 inches long), extending 12 inches from the toilet centerline on one side and 24 inches on the other side (except where an administrative authority requires flush controls to be located in a position that conflicts with the location of the rear grab bar, in which case the bar may be split or shifted to the open side). Provide a side grab bar that is at least 42 inches in overall length, with the far end mounted at least 54 inches from the rear wall and the closer end no more than 12 inches from the rear wall. Grab bars shall be

mounted between 33 and 36 inches high to the top of the gripping surface; with a diameter between 1¼ and 2 inches (or, if the grab bar is not circular, a perimeter between 4 and 4¾ inches and cross-section dimensions of no more than 2 inches); with 1½ inches between the grab bar and the wall; and at least 1½ inches between the grab bar and any object projecting beside or below it and at least 12 inches between the grab bar and any object projecting above it. Grab bars shall also comply with requirements for surface hazards, fittings, and structural strength. Standards §§ 213.3.2, 604.5, 609.

10. Within 9 months of entry of the Consent Decree, the County will complete the following modifications to **Family Visitation Center**, located at 231 D Street in Eureka.

a. Parking

i. No designated accessible van parking space is provided. Provide a van accessible parking space that is a minimum of 132 inches wide and served by an access aisle at least 60 inches wide, or a minimum of 96 inches wide and served by an access aisle at least 96 inches wide; and designated by a vertical sign with the International Symbol of Accessibility and an additional "van accessible" sign mounted at least 60 inches high to the bottom of the signs (unless there are 4 or fewer total parking spaces, in which case, signage is not required). The space and access aisle shall contain no changes in level, with slopes and cross-slopes not exceeding 2.08%, and shall have surfaces that are firm, stable, and slip-resistant; and the access aisle shall be marked so as to discourage parking in it. Standards §§ 208, 302, 502.

b. Single User Toilet Room

i. Women's

(1) The sign is not mounted on the wall adjacent to the latch side of the door. Provide a toilet room sign with raised and Braille characters. Tactile signs shall be mounted on the wall adjacent to the latch side of the door or the nearest adjacent wall (except that signs can be mounted on the push side of doors with closers and without hold-open devices); mounted 48 inches minimum from floor to the baseline of the lowest tactile character and 60 inches maximum from the floor to the baseline of the highest tactile character; and located so that a clear floor space of at least 18 inches by 18 inches, centered on the tactile characters, is provided beyond the arc of any door's swing between the closed and 45 degrees open positions. If not all toilet rooms are accessible, provide signage with the International Symbol of Accessibility at all accessible toilet rooms. Standards §§ 216.2, 703.

(2) The pressure required to open the entry door is 10 pounds. Provide a door that requires no more than 5 pounds of force to open (not including the initial force needed to overcome inertia, retracting bolts, etc.). Standards §§ 206.5, 404.2.9.

(3) The entry door has insufficient clear floor space on the latch side in the pull direction of the door. Provide a maneuvering clearance at least 60 inches deep perpendicular to the doorway and at least 18 inches wide parallel to the doorway on the latch side. §§ 206.5, 404.2.4.1.

(4) No accessible coat hook is provided. Provide a coat hook or towel hook between 15 and 48 inches high accompanied by clear floor space of 30 by 48 inches. Standards §§ 213.3.7, 305, 308, 603.4.

(5) The toilet centerline is 19 inches from the side wall. Provide a toilet with its centerline between 16 and 18 inches from the near side wall. Standards §§ 213.3.2, 604.2.

(6) The rear grab bar at the toilet is obstructed by the toilet tank. Provide grab bars that have at least 1½ inches between the grab bar and any object projecting beside or below it and at least 12 inches between the grab bar and any object projecting above it. Standards §§ 213.3.2, 604.5, 609.3.

ii. Men's

(1) The entry door has insufficient clear floor space on the latch side in the pull direction. Provide a maneuvering clearance at least 60 inches deep perpendicular to the doorway and at least 18 inches wide parallel to the doorway on the latch side. §§ 206.5, 404.2.4.1.

(2) Insufficient turning space is provided within the toilet room. Provide an unobstructed turning space at least 60 inches in diameter or a T-shaped space complying with § 304.3.2. Standards §§ 213.2, 304.3, 603.2.1.

(3) The toilet centerline is 19 inches from the side wall. Provide a toilet with its centerline between 16 and 18 inches from the near side wall. Standards §§ 213.3.2, 604.2.

(4) The toilet flush control is on the closed side. Provide a flush control mounted on the "open" side of the toilet's clear floor space, between 15 and 48 inches high, and requiring a maximum of 5 pounds of force to operate; or provide an automatic flush device.

Standards §§ 213.3.2, 309.4, 604.6.

(5) The rear grab bar at the toilet is obstructed by the toilet tank. Provide grab bars that have at least 1½ inches between the grab bar and any object projecting beside or below it and at least 12 inches between the grab bar and any object projecting above it. Standards §§ 213.3.2, 604.5, 609.3.

11. Within 9 months of entry of the Consent Decree, the County will complete the following modifications to the **Probation Department**, located at 1105 Sixth Street in Eureka.

a. Parking. The parking reserved for persons with disabilities lacks required signage. At sites with 5 or more parking spaces, provide vertical signs with the International Symbol of Accessibility at all spaces designated as reserved for persons with disabilities, and, at van accessible parking spaces, provide an additional "van accessible" sign. Mount signs at least 60 inches high to the bottom of the sign. Standards §§ 208, 216.5, 502.6, 703.7.2.1.

b. Accessible Route.

i. The entrance into the building has a 3 inch change in level at the door threshold. Provide an accessible door with a threshold that is no more than ¼ inch high, or is between ¼ inch and ½ inch high (¾ inch high if the threshold is existing or altered) and is beveled with a slope no greater than 50%. Standards §§ 206.5, 302, 303, 404.2.5.

ii. The hallway entrance door to the program has knob hardware. Provide a door with hardware, mounted between 34 and 48 inches high, that is operable with one hand and does not require tight grasping, pinching, or twisting of the wrist and requires no more than 5 pounds of force to operate. Lever-operated mechanisms, push-type mechanisms, and U-shaped handles are acceptable designs. Standards §§ 206.4, 206.5, 309.4, 404.2.7.

c. Single User Toilet Room

i. The toilet room sign is not mounted on the wall adjacent to the latch side of the door with Braille and raised characters. Provide a toilet room sign with raised and Braille characters. Tactile signs shall be mounted on the wall adjacent to the latch side of the door or the nearest adjacent wall (except that signs can be mounted on the push side of doors with closers and without hold-open devices); mounted 48 inches minimum from floor to the baseline of the lowest tactile character and 60 inches maximum from the floor to the baseline of the highest tactile character; and located so that a clear floor space of at least 18 inches by 18 inches, centered on the tactile characters, is provided beyond the arc of any door's swing

between the closed and 45 degrees open positions. If not all toilet rooms are accessible, provide signage with the International Symbol of Accessibility at all accessible toilet rooms. Standards §§ 216.2, 703.

ii. The toilet centerline is 28 inches from the side wall. Provide a toilet with its centerline between 16 and 18 inches from the near side wall. Standards §§ 213.3.2, 604.2.

iii. The toilet flush control is on the closed side. Provide a flush control mounted on the "open" side of the toilet's clear floor space, between 15 and 48 inches high, and requiring a maximum of 5 pounds of force to operate; or provide an automatic flush device. Standards §§ 213.3.2, 309.4, 604.6.

12. Within 9 months of entry of the Consent Decree, the County will complete the following modifications to the **Rio Dell Library** located at 715 Wildwood Avenue in Rio Dell.

a. Parking. The parking has no designated accessible parking. Provide a van accessible parking space that is a minimum of 132 inches wide and served by an access aisle at least 60 inches wide, or a minimum of 96 inches wide and served by an access aisle at least 96 inches wide; and designated by a vertical sign with the International Symbol of Accessibility and an additional "van accessible" sign mounted at least 60 inches high to the bottom of the signs (unless there are 4 or fewer total parking spaces, in which case, signage is not required). The space and access aisle shall contain no changes in level, with slopes and cross-slopes not exceeding 2.08%, and shall have surfaces that are firm, stable, and slip-resistant; and the access aisle shall be marked so as to discourage parking in it. Standards §§ 208, 302, 502.

b. Accessible Route

i. The route from the parking lot to the building is not stable, firm, or slip resistant. To each area, feature, or element described, provide at least one accessible route that coincides with or is located in the same area as general circulation paths. The accessible route must have a minimum clear width of 36 inches (except that it may narrow to no less than 32 inches for a length of no more than 24 inches), or a minimum clear width of 42 inches if there is a U-turn around an obstruction less than 48 inches wide; have passing spaces at least every 200 feet; have a minimum clear headroom of 80 inches; have a surface that is firm, stable, and slip resistant; have, in the absence of a curb ramp, ramp, elevator, or platform lift, no level changes in excess of ½ inch vertically; have no level changes greater than ¼ inch vertically unless they are beveled with a slope no greater than 50%; and have a running slope no greater than 5% (or have been constructed as a fully accessible ramp) and a cross slope no greater than 2.08%. Standards §§ 206, 301.1, 401.1.

ii. The ramp surface at the bottom is not stable, firm, or slip resistant; the landing at the change in direction is 53 inches by 40 inches; and the handrails are mounted at 41 inches above the finished floor. Provide a ramp that is at least 36 inches wide between handrails, with a slope not exceeding 8.33% and a cross slope not exceeding 2.08%; with level landings at least as wide as the ramp and 60 inches long at the top and bottom of every ramp run; with level landings at least 60 inches by 60 inches when the ramp changes direction; and with no changes in level other than the slope and cross-slope. The ramp shall have no run containing a rise greater than 30 inches. On each side of ramp runs and landings, provide edge protection that consists of either an extended ground surface at least 12 inches beyond the edge of the surface of the ramp or landing, or a curb or barrier that prevents the passage of a 4 inch diameter sphere where any part of the sphere is within 4 inches of the surface. On both sides of ramps with rises greater than 6 inches, provide handrails that have a diameter between 1¼ and 2 inches or a perimeter between 4 inches and 6¼ inches and a cross section of no more than 2¼ inches such that the handrails are continuous along the full length of the ramp run. Inside handrails on switchbacks or doglegs shall be continuous between runs; handrails shall have a continuous gripping surface extending at least 12 inches beyond the top and bottom of the ramp parallel with the ground surface; extensions shall return to the wall, guard, or landing surface (or continue on as handrails); handrails shall not rotate within their fittings; handrails shall be mounted at a consistent height between 34 inches and 38 inches above the ramp surface and at least 1½ inches from the wall; gripping surfaces and adjacent surfaces shall be free of sharp or abrasive elements and have rounded edges; and gripping surfaces shall not be obstructed along their tops or sides and the bottoms shall not be obstructed for more than 20% of their length and have no horizontal projections occurring closer than 1½ inches from the bottom of the gripping surface (except that the distance between horizontal projections and the bottom of the gripping surface can be reduced by ⅛ inch for each ½ inch of handrail perimeter over 4 inches). If the ramp is subject to wet conditions, landings shall be designed to prevent the accumulation of water. Standards §§ 206.2, 405, 505.

13. Within 9 months of entry of the Consent Decree, the County will complete the following modifications to the **Trinidad Library**, located at 380 Janis Court in Trinidad.

a. Parking

i. The parking lot has no access aisles. At each accessible parking space, provide an access aisle that is at least 60 inches wide, except at van accessible parking spaces that are less than 132 inches wide, in which case provide an access aisle at least 96 inches wide. All access aisles shall

adjoin an accessible route; extend the full length of the parking space they serve; be marked so as to discourage parking in them; contain no changes in level, with slopes and cross-slopes not exceeding 2.08%; and have surfaces that are firm, stable, and slip-resistant. Standards §§ 208, 302, 502.

ii. The designated accessible van parking space lacks the required signage. At sites with 5 or more parking spaces, provide vertical signs with the International Symbol of Accessibility at all spaces designated as reserved for persons with disabilities, and, at van accessible parking spaces, provide an additional "van accessible" sign. Mount signs at least 60 inches high to the bottom of the sign. Standards §§ 208, 216.5, 502.6, 703.7.2.1.

b. Accessible Route

i. Signage indicating the accessible route to the accessible entrance is not provided. Provide accessible directional signage at inaccessible entrances directing users to the accessible entrance, and provide accessible signage with the International Symbol of Accessibility at all permanent accessible entrances. Standards §§ 216.6, 703.5, 703.7.2.1

14. Within 9 months of entry of the Consent Decree, the County will complete the following modifications to the **SCOP Office** located at 76 Willow Road in Willow Creek.

a. No designated accessible van parking space is provided. Provide a van accessible parking space that is a minimum of 132 inches wide and served by an access aisle at least 60 inches wide, or a minimum of 96 inches wide and served by an access aisle at least 96 inches wide; and designated by a vertical sign with the International Symbol of Accessibility and an additional "van accessible" sign mounted at least 60 inches high to the bottom of the signs (unless there are 4 or fewer total parking spaces, in which case, signage is not required). The space and access aisle shall contain no changes in level, with slopes and cross-slopes not exceeding 2.08%, and shall have surfaces that are firm, stable, and slip-resistant; and the access aisle shall be marked so as to discourage parking in it. Standards §§ 208, 302, 502.

b. The ramp has no edge protection; no level landing at the top; the handrail height is not between 34 inches and 38 inches; and there are no 12 inch handrail extensions at the top or bottom. Provide a ramp that is at least 36 inches wide between handrails, with a slope not exceeding 8.33% and a cross slope not exceeding 2.08%; with level landings at least as wide as the ramp and 60 inches long at the top and bottom of every ramp run; with level landings at least 60 inches by 60 inches when the ramp changes direction; and with no changes in level other than the slope and cross-slope. The ramp shall have no run containing a rise greater than 30 inches. On each side of ramp runs and landings, provide edge protection that consists of either an extended ground surface at least 12

inches beyond the edge of the surface of the ramp or landing, or a curb or barrier that prevents the passage of a 4 inch diameter sphere where any part of the sphere is within 4 inches of the surface. On both sides of ramps with rises greater than 6 inches, provide handrails that have a diameter between 1¼ and 2 inches or a perimeter between 4 inches and 6¼ inches and a cross section of no more than 2¼ inches such that the handrails are continuous along the full length of the ramp run. Inside handrails on switchbacks or doglegs shall be continuous between runs; handrails shall have a continuous gripping surface extending at least 12 inches beyond the top and bottom of the ramp parallel with the ground surface; extensions shall return to the wall, guard, or landing surface (or continue on as handrails); handrails shall not rotate within their fittings; handrails shall be mounted at a consistent height between 34 inches and 38 inches above the ramp surface and at least 1½ inches from the wall; gripping surfaces and adjacent surfaces shall be free of sharp or abrasive elements and have rounded edges; and gripping surfaces shall not be obstructed along their tops or sides and the bottoms shall not be obstructed for more than 20% of their length and have no horizontal projections occurring closer than 1½ inches from the bottom of the gripping surface (except that the distance between horizontal projections and the bottom of the gripping surface can be reduced by ⅛ inch for each ½ inch of handrail perimeter over 4 inches). If the ramp is subject to wet conditions, landings shall be designed to prevent the accumulation of water. Standards §§ 206.2, 405, 505.

15. Within 9 months of entry of the Consent Decree, the County will complete the following modifications to the **Willow Creek Library** located at the intersection of Highway 299 and 96 in Willow Creek.

a. The surface of the route from the parking lot to the building entrance is not stable, firm, and slip resistant. To each area, feature, or element described, provide at least one accessible route that coincides with or is located in the same area as general circulation paths. The accessible route must have a minimum clear width of 36 inches (except that it may narrow to no less than 32 inches for a length of no more than 24 inches), or a minimum clear width of 42 inches if there is a U-turn around an obstruction less than 48 inches wide; have passing spaces at least every 200 feet; have a minimum clear headroom of 80 inches; have a surface that is firm, stable, and slip resistant; have, in the absence of a curb ramp, ramp, elevator, or platform lift, no level changes in excess of ½ inch vertically; have no level changes greater than ¼ inch vertically unless they are beveled with a slope no greater than 50%; and have a running slope no greater than 5% (or have been constructed as a fully accessible ramp) and a cross slope no greater than 2.08%. Standards §§ 206, 301.1, 401.1.

b. The entry door has knob hardware. Provide a door with hardware, mounted between 34 and 48 inches high, that is operable with one hand and does not require tight grasping, pinching, or twisting of the wrist and requires no more than 5 pounds of force to operate. Lever-operated mechanisms, push-type mechanisms, and U-shaped handles are acceptable designs. Standards §§ 206.4,

206.5, 309.4, 404.2.7.

c. The free standing drinking fountain lacks knee space. Provide a drinking fountain with a clear floor space of at least 30 inches by 48 inches (36 inches by 48 inches if the unit is in an alcove more than 24 inches deep) positioned for a forward approach and centered on the unit. Knee clearance shall be at least 11 inches deep at 9 inches high and at least 8 inches deep at 27 inches high. Standards §§ 211, 305, 306, 602.2.

d. The toilet room contains a number of inaccessible elements and is not accessible to people with disabilities. Provide an accessible toilet room such that all of the room's elements, including signage, door, door hardware, clear floor space, toilet, stall size and arrangement (if any), urinal (if provided), grab bars, lavatory, mirror, controls, and dispensers, comply with the Standards. Standards §§ 204, 205, 206, 213, 216, 225, 301.1, 401.1, 601.1, 703, 811.

16. Within 15 months of entry of this Consent Decree, the County will complete the following modifications to the **Blue Lake Library** located at 111 Greenwood Avenue in Blue Lake.

a. The tables in the library do not provide sufficient knee space. At least 5% (but no fewer than 1) of dining or work surfaces shall be available for use by people with mobility disabilities. Each accessible dining or work surface shall be on an accessible route; with clear floor space 30 inches wide by 48 inches deep positioned for a forward approach; with knee clearance at least 11 inches deep at 9 inches high and at least 8 inches deep at 27 inches high; and with a dining or work surface between 28 inches and 34 inches high. They shall be distributed throughout the facility, if applicable. Standards §§ 226, 305, 306, 902.

b. Single User Toilet Room

i. The toilet room sign is not mounted on the wall adjacent to the latch side of the door and lack Braille and raised characters. Provide a toilet room sign with raised and Braille characters. Tactile signs shall be mounted on the wall adjacent to the latch side of the door or the nearest adjacent wall (except that signs can be mounted on the push side of doors with closers and without hold-open devices); mounted 48 inches minimum from floor to the baseline of the lowest tactile character and 60 inches maximum from the floor to the baseline of the highest tactile character; and located so that a clear floor space of at least 18 inches by 18 inches, centered on the tactile characters, is provided beyond the arc of any door's swing between the closed and 45 degrees open positions. If not all toilet rooms are accessible, provide signage with the International Symbol of Accessibility at all accessible toilet rooms. Standards §§ 216.2, 703.

ii. The lavatory faucet hardware requires tight grasping, pinching, or twisting

of the wrist. Provide a lavatory with a faucet that can be operated with no more than 5 pounds of force and can be used with one hand and without tight grasping, pinching, or twisting of the wrist (lever-operated, push-type, and electronically controlled mechanisms are examples of acceptable designs). Hand-operated metering faucets shall remain open for at least 10 seconds. Standards §§ 213.3.4, 309.4, 606.4.

iii. The toilet flush control is on the closed side. Provide a flush control mounted on the "open" side of the toilet's clear floor space, between 15 and 48 inches high, and requiring a maximum of 5 pounds of force to operate; or provide an automatic flush device. Standards §§ 213.3.2, 309.4, 604.6.

iv. The closer end of the side grab bar at the toilet is mounted 14.5 inches from the rear wall. Provide a side grab bar that is at least 42 inches in overall length, with the far end mounted at least 54 inches from the rear wall, and with the closer end no more than 12 inches from the rear wall. Standards §§ 213.3.2, 604.5.1.

v. The required clear floor space at the toilet is obstructed by a trash receptacle. Provide clearance at the toilet that is at least 60 inches wide and 56 inches deep. This clearance may overlap with the toilet, grab bars, dispensers, sanitary napkin disposal, coat hooks, shelves, accessible routes, clear floor space and clearances for other fixtures, and turning space; but no other fixtures or obstructions, including lavatories, may be located within this clearance. Standards §§ 213.3.2, 604.3.

vi. The lavatory clear floor space is obstructed by boxes. Provide a lavatory with clear floor space at least 30 inches wide by 48 inches deep positioned for a forward approach. Standards §§ 213.3.4, 305, 606.

c. The running slope of the ramp is 14.2%; the cross-slope is 2.5%; handrails are not provided on both sides; and the handrail provided is not between 34" and 38" high; lacks 12 inch handrail extensions at the top and bottom; and the handrail does not return smoothly to the wall or post. Provide a ramp that is at least 36 inches wide between handrails, with a slope not exceeding 8.33% and a cross slope not exceeding 2.08%; with level landings at least as wide as the ramp and 60 inches long at the top and bottom of every ramp run; with level landings at least 60 inches by 60 inches when the ramp changes direction; and with no changes in level other than the slope and cross-slope. The ramp shall have no run containing a rise greater than 30 inches. On each side of ramp runs and landings, provide edge protection that consists of either an extended ground surface at least 12 inches beyond the edge of the surface of the ramp or landing, or a curb or barrier that prevents the passage of a 4 inch diameter sphere where any part of the sphere is within 4 inches of the surface. On both sides of ramps with rises greater than 6 inches, provide handrails that have a diameter between 1¼ and 2 inches or

a perimeter between 4 inches and 6¼ inches and a cross section of no more than 2¼ inches such that the handrails are continuous along the full length of the ramp run. Inside handrails on switchbacks or doglegs shall be continuous between runs; handrails shall have a continuous gripping surface extending at least 12 inches beyond the top and bottom of the ramp parallel with the ground surface; extensions shall return to the wall, guard, or landing surface (or continue on as handrails); handrails shall not rotate within their fittings; handrails shall be mounted at a consistent height between 34 inches and 38 inches above the ramp surface and at least 1½ inches from the wall; gripping surfaces and adjacent surfaces shall be free of sharp or abrasive elements and have rounded edges; and gripping surfaces shall not be obstructed along their tops or sides and the bottoms shall not be obstructed for more than 20% of their length and have no horizontal projections occurring closer than 1½ inches from the bottom of the gripping surface (except that the distance between horizontal projections and the bottom of the gripping surface can be reduced by ⅛ inch for each ½ inch of handrail perimeter over 4 inches). If the ramp is subject to wet conditions, landings shall be designed to prevent the accumulation of water. Standards §§ 206.2, 405, 505.

d. Parking

i. No designated van accessible parking space is provided. Provide a van accessible parking space that is a minimum of 132 inches wide and served by an access aisle at least 60 inches wide, or a minimum of 96 inches wide and served by an access aisle at least 96 inches wide; and designated by a vertical sign with the International Symbol of Accessibility and an additional "van accessible" sign mounted at least 60 inches high to the bottom of the signs (unless there are 4 or fewer total parking spaces, in which case, signage is not required). The space and access aisle shall contain no changes in level, with slopes and cross-slopes not exceeding 2.08%, and shall have surfaces that are firm, stable, and slip-resistant; and the access aisle shall be marked so as to discourage parking in it. Standards §§ 208, 302, 502.

ii. The parking reserved for persons with disabilities lacks required signage. At all spaces designated as reserved for persons with disabilities, provide vertical signs with the International Symbol of Accessibility located such that they cannot be obstructed by parked vehicles. Standards §§ 4.6.4, 4.30.7(1). At sites with 5 or more parking spaces, provide vertical signs with the International Symbol of Accessibility at all spaces designated as reserved for persons with disabilities, and, at van accessible parking spaces, provide an additional "van accessible" sign. Mount signs at least 60 inches high to the bottom of the sign. Standards §§ 208, 216.5, 502.6, 703.7.2.1.

iii. One of the designated accessible parking spaces is not located on the

shortest accessible route to the accessible facility entrance. Provide accessible parking that is located on the shortest accessible route to an accessible pedestrian entrance to the facility. Standards § 208.3.

17. Within 9 months of entry of the Consent Decree, the County will complete the following modifications to the **Public Health (WIC) Office** located at 1108 Main Street in Fortuna.

    a. Accessible Route. The entrance door lacks sufficient clear floor space on the pull side. Provide maneuvering clearance at least 60 inches deep perpendicular to the doorway and at least 18 inches wide parallel to the doorway on the latch side of the door. Standards §§ 206.5, 404.2.4.1.

ATTACHMENT K

WAIVER AND RELEASE OF CLAIMS

I,_____, hereby agree that in consideration of the payment of $_____ made to me pursuant the Consent Decree between the United States of America and Humboldt County, CA, I hereby release Humboldt County, CA, and all of its agents and employees, as well as any affiliated entities, successors, and assigns, from any and all legal claims for monetary or equitable relief that I now have arising in whole or in part under Title II of the Americans with Disabilities Act. I have been advised that, before signing this release, I have the right to consult a private attorney regarding its contents. I have read this release and understand its contents, and choose to sign it of my own free will and not under duress.

AGREED:

_____ _____

Signature Date